EVALUATION REPORT

FLORIDA BUILDING CODE, 8TH EDITION (2023)

Issued February 11, 2026

Manufacturer: WORTHOUSE INC.
321 Mills Road
Waynesboro, GA 30830
(706) 955-4005
www.worthouse.com

Manufacturing: Poland

Quality Assurance: UL LLC (QUA9625)

SCOPE

Category: Roofing
Subcategory: Metal Roofing
Code Edition: Florida Building Code, 8th Edition (2023) including High-Velocity Hurricane Zones (HVHZ)
Code Sections: 1504.3.1, 1504.3.2, 1504.6, 1518.9, 1523.6.5.2.4
Properties: Wind Resistance

REFERENCES

Entity	Report No.	Standard	Year
PRI Construction Materials Technologies (TST5878)	BDMT-001-02-01	UL 1897	2015
		UL 580	2006
		TAS 125	2003
PRI Construction Materials Technologies (TST5878)	BDMT-001-02-02	UL 1897	2015
		UL 580	2006
		TAS 125	2003
PRI Construction Materials Technologies (TST5878)	BDMT-002-02-01	TAS 100	2023
PRI Construction Materials Technologies (TST5878)	BDMT-004-02-01	TAS 100	2023
PRI Construction Materials Technologies (TST5878)	BDMT-005-02-01	ASTM G 155	2013
		TAS 110	2000
PRI Construction Materials Technologies (TST5878)	BDMT-006-02-01	ASTM B 117	2016
		TAS 100	2000
PRI Construction Materials Technologies (TST5878)	1997T0003	UL 1897	2015
		UL 580	2006
		TAS 125	2003
PRI Construction Materials Technologies (TST5878)	1997T0004	UL 1897	2015
		UL 580	2006
		TAS 125	2003
PRI Construction Materials Technologies (TST5878)	1997T0005	UL 1897	2015
		UL 580	2006
		TAS 125	2003
PRI Construction Materials Technologies (TST5878)	1997T0009	UL 1897	2015
		UL 580	2006
		TAS 125	2003
PRI Construction Materials Technologies (TST5878)	1997T0011	UL 1897	2015
		UL 580	2006
		TAS 125	2003
PRI Construction Materials Technologies (TST5878)	1997T0012	UL 1897	2015
		UL 580	2006
		TAS 125	2003
PRI Construction Materials Technologies (TST5878)	1997T0013	ASTM D 1761	2006

This evaluation report is provided for State of Florida product approval under Rule 61G20-3. The manufacturer shall notify CREEK Technical Services, LLC of any product changes or quality assurance changes throughout the duration for which this report is valid. This evaluation report does not express nor imply warranty, installation, recommended use, or other product attributes that are not specifically addressed herein.

PRODUCT DESCRIPTIONS

Panel: Supre Panel
Description: Through fastened preformed panels; Maximum 45.28-inch coverage
Material: Minimum 26 ga. D-MATT coated ASTM A653 steel (F_y = min. 50 ksi); Shall conform with FBC Section 1507.4.3

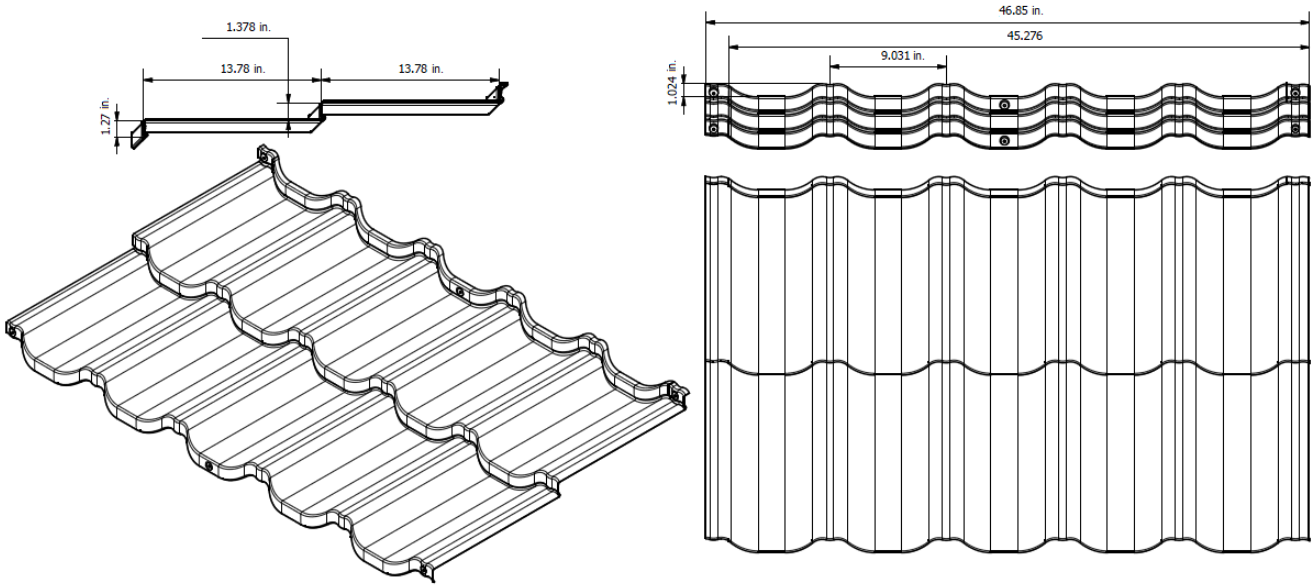

Supre Panel Dimensions

Panel: Dura Panel
Description: Through fastened preformed panels; Maximum 45.28-inch coverage
Material: Minimum 26 ga. D-MATT coated ASTM A653 steel (F_y = min. 50 ksi); Shall conform with FBC Section 1507.4.3

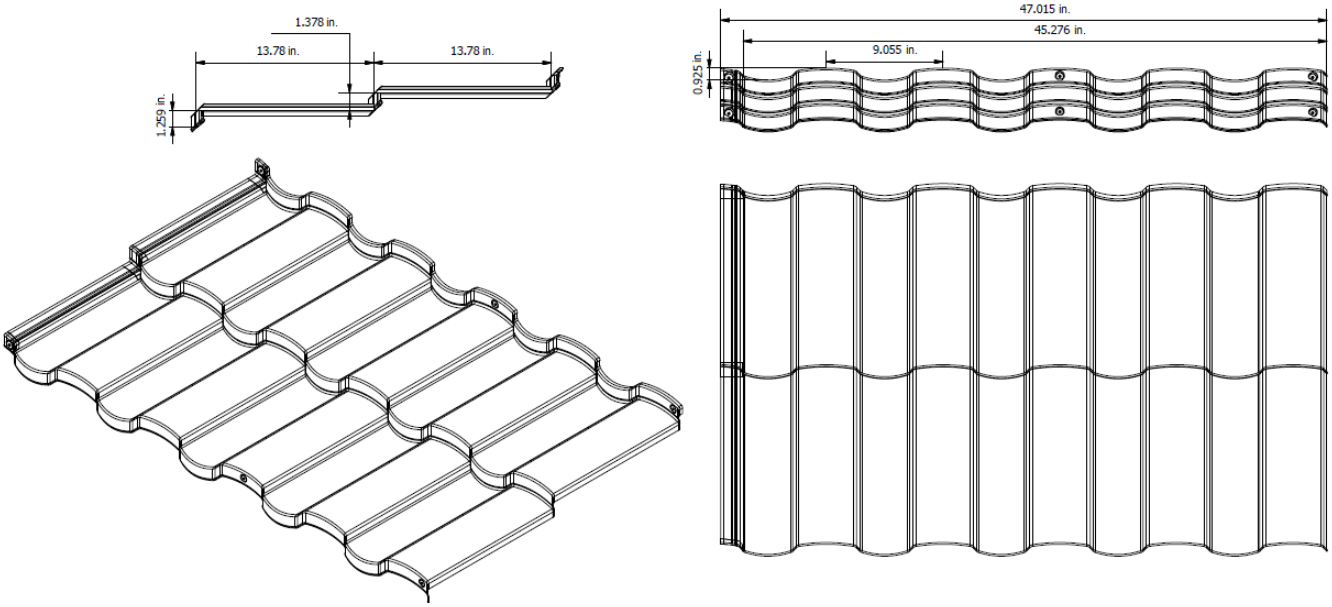

Dura Panel Dimensions

This evaluation report is provided for State of Florida product approval under Rule 61G20-3. The manufacturer shall notify CREEK Technical Services, LLC of any product changes or quality assurance changes throughout the duration for which this report is valid. This evaluation report does not express nor imply warranty, installation, recommended use, or other product attributes that are not specifically addressed herein.

Panel: Eura Panel
Description: Through fastened preformed panels; Maximum 43.34-inch coverage
Material: Minimum 26 ga. D-MATT coated ASTM A653 steel (F_y = min. 50 ksi); Shall conform with FBC Section 1507.4.3

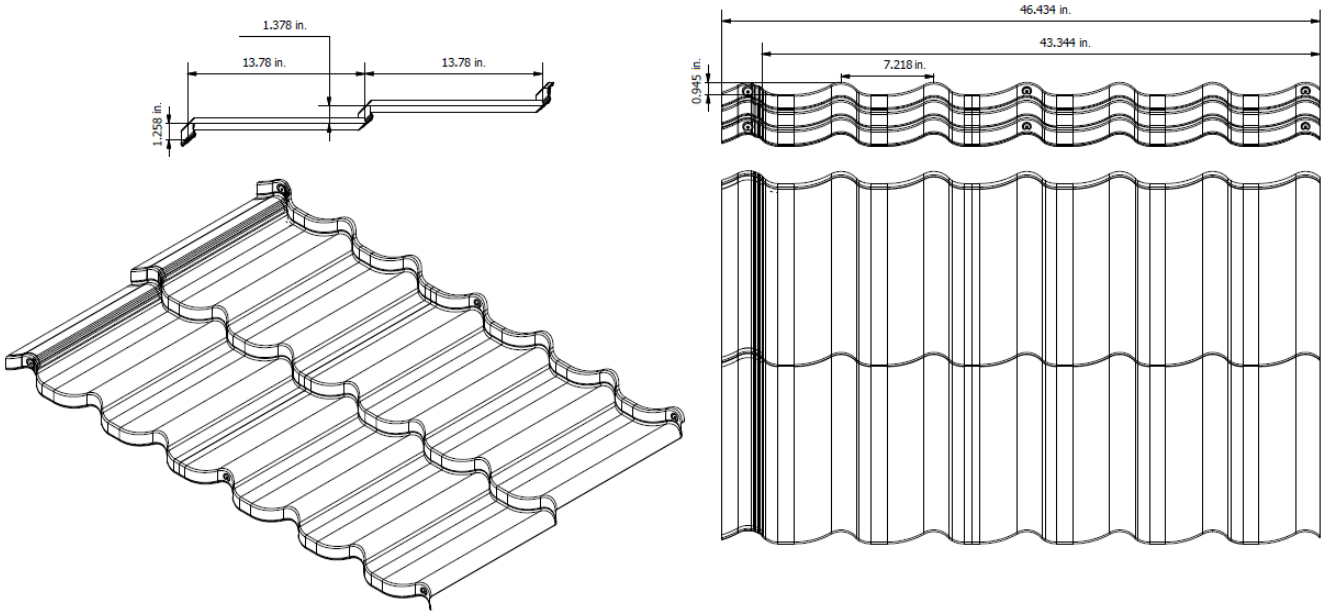

Eura Panel Dimensions

Panel: Ulta Panel
Description: Through fastened preformed panels; Maximum 44.88-inch coverage
Material: Minimum 26 ga. D-MATT coated ASTM A653 steel (F_y = min. 50 ksi); Shall conform with FBC Section 1507.4.3

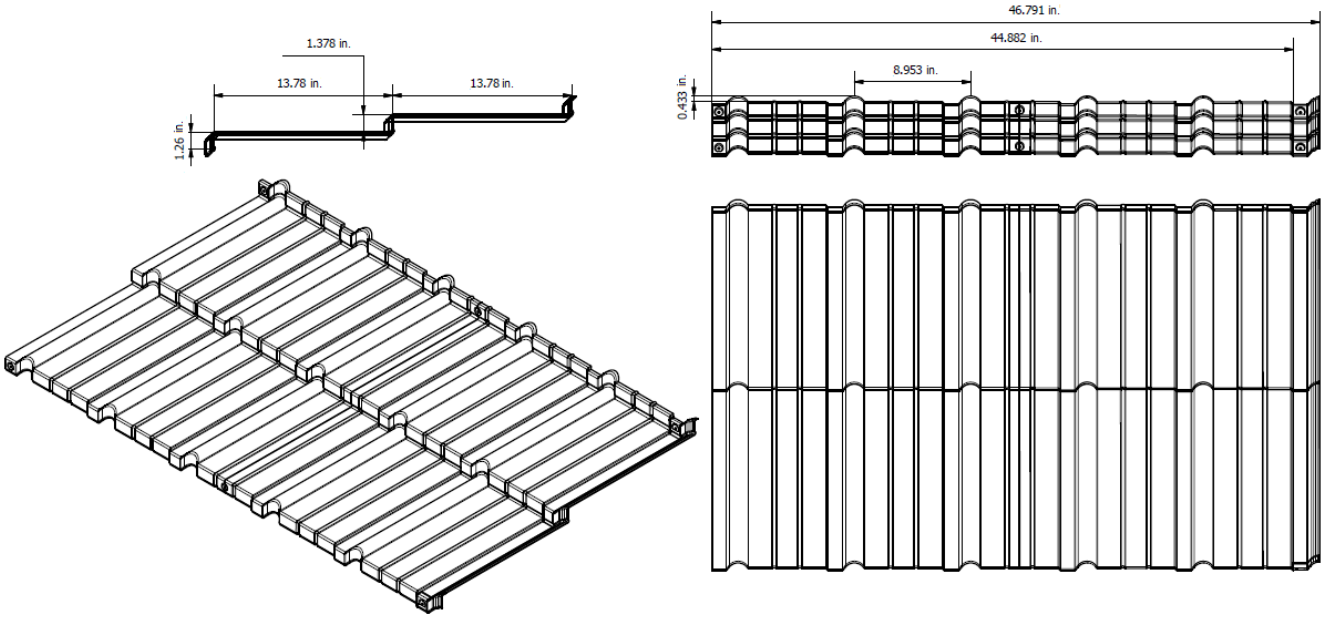

Ulta Panel Dimensions

This evaluation report is provided for State of Florida product approval under Rule 61G20-3. The manufacturer shall notify CREEK Technical Services, LLC of any product changes or quality assurance changes throughout the duration for which this report is valid. This evaluation report does not express nor imply warranty, installation, recommended use, or other product attributes that are not specifically addressed herein.

Panel: Como Panel
Description: Through fastened preformed panels; Maximum 46.54-inch coverage
Material: Minimum 26 ga. D-MATT coated ASTM A653 steel (F_y = min. 40 ksi); Shall conform with FBC Section 1507.4.3

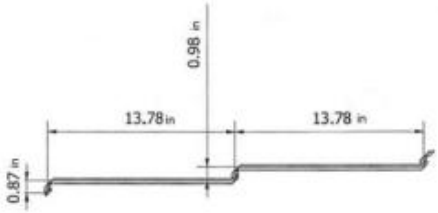

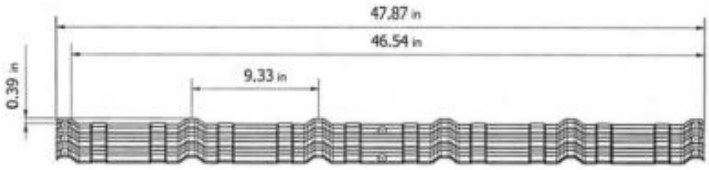

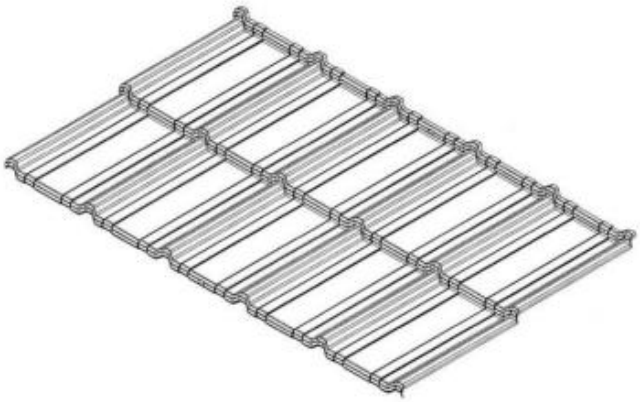

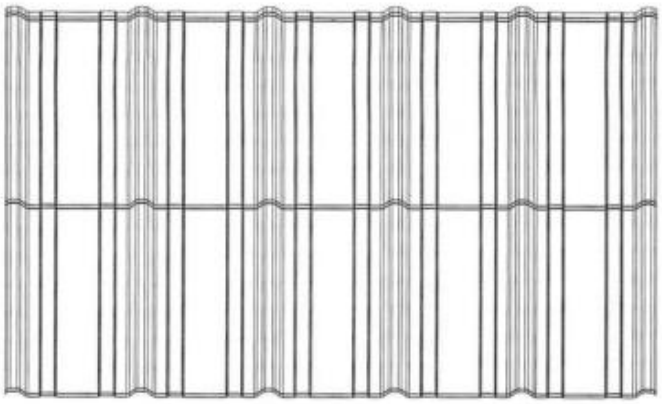

Como Panel Dimensions

This evaluation report is provided for State of Florida product approval under Rule 61G20-3. The manufacturer shall notify CREEK Technical Services, LLC of any product changes or quality assurance changes throughout the duration for which this report is valid. This evaluation report does not express nor imply warranty, installation, recommended use, or other product attributes that are not specifically addressed herein.

APPROVED ASSEMBLIES

System 1A: Direct-to-Deck for Supre, Dura, Ulta and Eura Panels	
Slope:	Shall be in accordance with the FBC.
Roof Deck:	Solid or closely fitted min. 15/32-inch, 32/16 span rated, 4-ply, CDX plywood sheathing for new and existing construction at max. 24-inch span; In the HVHZ, new construction shall be min. 19/32-inch, 40/20 span rated, CDX plywood at max. 24-inch span; Designed by others in accordance with FBC requirements.
Underlayment:	Installed in accordance with the FBC. In the HVHZ, at the rake and eave, underlayment shall be wrapped over the eave and down the fascia prior to installing the drip edge metal. In the HVHZ, the valley pan shall be sealed to the underlayment on each edge with a continuous 3/4-inch wide bead of a*pproved* sealant.
Attachment:	See Appendix A for fastening patterns; 4.8mm x 35mm HWH screws with 14 mm O.D. sealing washers attached at a rate of **"10 screws per panel"** for Supre, Dura and Ulta Panels or **"12 screws per panel"** for Eura Panel; Panel laps stitched with 4.8mm x 19mm HWH screws with 14mm O.D. sealing washers at the preformed locations; Fasteners shall penetrate the deck a minimum 3/8-inch and shall be corrosion resistant in accordance with section 1507.4.4 and 1506.6.
Maximum Design Pressures:	**-67.5 psf** *Pressure calculated using 2:1 margin of safety per 1504.9*

Maximum Mean Roof Heights
Slopes 2:12 – 12:12

Exposure	Basic Wind Speed (mph)								
	≤120	130	140	150	160	170	180	190	200
Zone 1 for Gable/Hip Roofs									
B	60 ft	60 ft	60 ft	60 ft	60 ft	57 ft	37 ft	25 ft	17 ft
C	60 ft	60 ft	60 ft	42 ft	22 ft	NA	NA	NA	NA
D	60 ft	60 ft	36 ft	16 ft	NA	NA	NA	NA	NA
Zone 2 for Gable Roofs and Zones 2 & 3 for Hip Roofs									
B	60 ft	60 ft	60 ft	52 ft	32 ft	20 ft	NA	NA	NA
C	60 ft	44 ft	21 ft	NA	NA	NA	NA	NA	NA
D	43 ft	17 ft	NA	NA	NA	NA	NA	NA	NA
Zone 3 for Gable Roofs									
B	60 ft	54 ft	31 ft	18 ft	NA	NA	NA	NA	NA
C	25 ft	NA	NA	NA	NA	NA	NA	NA	NA
D	NA	NA	NA	NA	NA	NA	NA	NA	NA

Notes: 1) Exposure category for the structure location shall be as defined in the Florida Building Code 2) Limitations are based on an effective wind area of $10ft^2$ or less 3) Topographic factors such as escarpments or hills are not included in the above assessment 4) Applicable for Enclosed Buildings without overhangs 5) NA = "Not Allowed" 6) K_d = 0.85 7) K_e = 1.0 8) Projects with mean roof heights of greater than 60 ft shall be evaluated by a licensed design professional 9) See page 18 for details for dimensions and locales of Zone 1, 2, and 3 10) V_{ult} is shown in the tables above. Design wind loads are calculated using $V_{asd} = V_{ult}\sqrt{0.6}$ per 1609.3.1.

This evaluation report is provided for State of Florida product approval under Rule 61G20-3. The manufacturer shall notify CREEK Technical Services, LLC of any product changes or quality assurance changes throughout the duration for which this report is valid. This evaluation report does not express nor imply warranty, installation, recommended use, or other product attributes that are not specifically addressed herein.

System 1B: Direct-to-Deck for Supre, Dura, Ulta and Eura Panels

Slope:	Shall be in accordance with the FBC.
Roof Deck:	Solid or closely fitted min. 15/32-inch, 32/16 span rated, 4-ply, CDX plywood sheathing for new and existing construction at max. 24-inch span; In the HVHZ, new construction shall be min. 19/32-inch, 40/20 span rated, CDX plywood at max. 24-inch span; Designed by others in accordance with FBC requirements.
Underlayment:	Installed in accordance with the FBC Section. In the HVHZ, at the rake and eave, underlayment shall be wrapped over the eave and down the fascia prior to installing the drip edge metal. In the HVHZ, the valley pan shall be sealed to the underlayment on each edge with a continuous 3/4-inch wide bead of a*pproved* sealant.
Attachment:	See Appendix A for fastening patterns; 4.8mm x 35mm HWH screws with 14 mm O.D. sealing washers attached at a rate of **"20 screws per panel"** for Supre, Dura and Ulta Panel or **"24 screws per panel"** for Eura Panel; Panel laps stitched with 4.8mm x 19mm HWH screws with 14mm O.D. sealing washers at the preformed locations. Fasteners shall penetrate the deck a minimum 3/8-inch and shall be corrosion resistant in accordance with section 1507.4.4 and 1506.6.
Maximum Design Pressures:	**-97.5 psf** *Pressure calculated using 2:1 margin of safety per 1504.9*

Maximum Mean Roof Heights
Slopes 2:12 – 12:12

Exposure	Basic Wind Speed (mph)								
	≤120	130	140	150	160	170	180	190	200
Zone 1 for Gable/Hip Roofs									
B	60 ft	60 ft	60 ft	60 ft	60 ft	60 ft	60 ft	60 ft	60 ft
C	60 ft	60 ft	60 ft	60 ft	60 ft	60 ft	43 ft	25 ft	15 ft
D	60 ft	60 ft	60 ft	60 ft	60 ft	32 ft	16 ft	NA	NA
Zone 2 for Gable Roofs and Zones 2 & 3 for Hip Roofs									
B	60 ft	60 ft	60 ft	60 ft	60 ft	60 ft	52 ft	35 ft	23 ft
C	60 ft	60 ft	60 ft	60 ft	35 ft	19 ft	NA	NA	NA
D	60 ft	60 ft	60 ft	27 ft	NA	NA	NA	NA	NA
Zone 3 for Gable Roofs									
B	60 ft	60 ft	60 ft	60 ft	45 ft	29 ft	18 ft	NA	NA
C	60 ft	60 ft	34 ft	17 ft	NA	NA	NA	NA	NA
D	60 ft	30 ft	NA	NA	NA	NA	NA	NA	NA

Notes: 1) Exposure category for the structure location shall be as defined in the Florida Building Code 2) Limitations are based on an effective wind area of 10ft^2 or less 3) Topographic factors such as escarpments or hills are not included in the above assessment 4) Applicable for Enclosed Buildings without overhangs 5) NA = "Not Allowed" 6) K_d = 0.85 7) K_e = 1.0 8) Projects with mean roof heights of greater than 60 ft shall be evaluated by a licensed design professional 9) See page 18 for details for dimensions and locales of Zone 1, 2, and 3 10) V_{ult} is shown in the tables above. Design wind loads are calculated using $V_{asd} = V_{ult}\sqrt{0.6}$ per 1609.3.1.

This evaluation report is provided for State of Florida product approval under Rule 61G20-3. The manufacturer shall notify CREEK Technical Services, LLC of any product changes or quality assurance changes throughout the duration for which this report is valid. This evaluation report does not express nor imply warranty, installation, recommended use, or other product attributes that are not specifically addressed herein.

System 1C: Direct-to-Deck for Supre, Dura, Ulta and Eura Panels

Slope:	Shall be in accordance with the FBC.
Roof Deck:	Solid or closely fitted min. 15/32-inch, 32/16 span rated, 4-ply, CDX plywood sheathing for new and existing construction at max. 24-inch span; In the HVHZ, new construction shall be min. 19/32-inch, 40/20 span rated, CDX plywood at max. 24-inch span; Designed by others in accordance with FBC requirements.
Underlayment:	Installed in accordance with the FBC. In the HVHZ, at the rake and eave, underlayment shall be wrapped over the eave and down the fascia prior to installing the drip edge metal. In the HVHZ, the valley pan shall be sealed to the underlayment on each edge with a continuous 3/4-inch wide bead of a*pproved* sealant.
Attachment:	See Appendix A for fastening patterns; #10 x min. 1.5-inch WoodZIP SCAMP CHWH 304SS, Hi-Lo threaded screws attached at a rate of **"10 screws per panel"** for Supre, Dura and Ulta Panels or **"12 screws per panel"** for Eura Panel; Panel laps stitched with 1/4"-14 x 7/8-inch SteelZIP SCAMP stitch screws at the preformed locations; Fasteners shall penetrate the deck a minimum 3/8-inch and shall be corrosion resistant in accordance with section 1507.4.4 and 1506.6.
Maximum Design Pressures:	**-89.75 psf** *Pressure calculated using 2:1 margin of safety per 1504.9*

Maximum Mean Roof Heights
Slopes 2:12 – 12:12

Exposure	Basic Wind Speed (mph)								
	≤120	130	140	150	160	170	180	190	200
Zone 1 for Gable/Hip Roofs									
B	60 ft	60 ft	60 ft	60 ft	60 ft	60 ft	60 ft	60 ft	49 ft
C	60 ft	60 ft	60 ft	60 ft	60 ft	50 ft	28 ft	17 ft	NA
D	60 ft	60 ft	60 ft	60 ft	40 ft	20 ft	NA	NA	NA
Zone 2 for Gable Roofs and Zones 2 & 3 for Hip Roofs									
B	60 ft	60 ft	60 ft	60 ft	60 ft	59 ft	38 ft	25 ft	17 ft
C	60 ft	60 ft	60 ft	44 ft	23 ft	NA	NA	NA	NA
D	60 ft	60 ft	38 ft	17 ft	NA	NA	NA	NA	NA
Zone 3 for Gable Roofs									
B	60 ft	60 ft	60 ft	54 ft	33 ft	21 ft	NA	NA	NA
C	60 ft	47 ft	22 ft	NA	NA	NA	NA	NA	NA
D	47 ft	18 ft	NA	NA	NA	NA	NA	NA	NA

Notes: 1) Exposure category for the structure location shall be as defined in the Florida Building Code 2) Limitations are based on an effective wind area of $10ft^2$ or less 3) Topographic factors such as escarpments or hills are not included in the above assessment 4) Applicable for Enclosed Buildings without overhangs 5) NA = "Not Allowed" 6) K_d = 0.85 7) K_e = 1.0 8) Projects with mean roof heights of greater than 60 ft shall be evaluated by a licensed design professional 9) See page 18 for details for dimensions and locales of Zone 1, 2, and 3 10) V_{ult} is shown in the tables above. Design wind loads are calculated using $V_{asd} = V_{ult}\sqrt{0.6}$ per 1609.3.1.

This evaluation report is provided for State of Florida product approval under Rule 61G20-3. The manufacturer shall notify CREEK Technical Services, LLC of any product changes or quality assurance changes throughout the duration for which this report is valid. This evaluation report does not express nor imply warranty, installation, recommended use, or other product attributes that are not specifically addressed herein.

System 1D: Direct-to-Deck for Supre, Dura, Ulta and Eura Panels	
Slope:	Shall be in accordance with the FBC.
Roof Deck:	Solid or closely fitted min. 15/32-inch, 32/16 span rated, 4-ply, CDX plywood sheathing for new and existing construction at max. 24-inch span; In the HVHZ, new construction shall be min. 19/32-inch, 40/20 span rated, CDX plywood at max. 24-inch span; Designed by others in accordance with FBC requirements.
Underlayment:	Installed in accordance with the FBC Section. In the HVHZ, at the rake and eave, underlayment shall be wrapped over the eave and down the fascia prior to installing the drip edge metal. In the HVHZ, the valley pan shall be sealed to the underlayment on each edge with a continuous 3/4-inch wide bead of a*pproved* sealant.
Attachment:	See Appendix A for fastening patterns; #10 x min. 1.5-inch WoodZIP SCAMP CHWH 304SS, Hi-Lo threaded screws attached at a rate of **"20 screws per panel"** for Supre, Dura and Ulta Panel or **"24 screws per panel"** for Eura Panel; Panel laps stitched with 1/4"-14 x 7/8-inch SteelZIP SCAMP stitch screws at the preformed locations. Fasteners shall penetrate the deck a minimum 3/8-inch and shall be corrosion resistant in accordance with section 1507.4.4 and 1506.6.
Maximum Design Pressures:	**-191 psf** *Pressure calculated using 2:1 margin of safety per 1504.9*

Maximum Mean Roof Heights
Slopes 2:12 – 12:12

Exposure	Basic Wind Speed (mph)								
	≤120	130	140	150	160	170	180	190	200
Zone 1 for Gable/Hip Roofs									
B	60 ft	60 ft	60 ft	60 ft	60 ft	60 ft	60 ft	60 ft	60 ft
C	60 ft	60 ft	60 ft	60 ft	60 ft	60 ft	60 ft	60 ft	60 ft
D	60 ft	60 ft	60 ft	60 ft	60 ft	60 ft	60 ft	60 ft	60 ft
Zone 2 for Gable Roofs and Zones 2 & 3 for Hip Roofs									
B	60 ft	60 ft	60 ft	60 ft	60 ft	60 ft	60 ft	60 ft	60 ft
C	60 ft	60 ft	60 ft	60 ft	60 ft	60 ft	60 ft	60 ft	60 ft
D	60 ft	60 ft	60 ft	60 ft	60 ft	60 ft	60 ft	60 ft	48 ft
Zone 3 for Gable Roofs									
B	60 ft	60 ft	60 ft	60 ft	60 ft	60 ft	60 ft	60 ft	60 ft
C	60 ft	60 ft	60 ft	60 ft	60 ft	60 ft	60 ft	46 ft	28 ft
D	60 ft	60 ft	60 ft	60 ft	60 ft	60 ft	34 ft	18 ft	NA

Notes: 1) Exposure category for the structure location shall be as defined in the Florida Building Code 2) Limitations are based on an effective wind area of 10ft^2 or less 3) Topographic factors such as escarpments or hills are not included in the above assessment 4) Applicable for Enclosed Buildings without overhangs 5) NA = "Not Allowed" 6) K_d = 0.85 7) K_e = 1.0 8) Projects with mean roof heights of greater than 60 ft shall be evaluated by a licensed design professional 9) See page 18 for details for dimensions and locales of Zone 1, 2, and 3 10) V_{ult} is shown in the tables above. Design wind loads are calculated using $V_{asd} = V_{ult}\sqrt{0.6}$ per 1609.3.1.

This evaluation report is provided for State of Florida product approval under Rule 61G20-3. The manufacturer shall notify CREEK Technical Services, LLC of any product changes or quality assurance changes throughout the duration for which this report is valid. This evaluation report does not express nor imply warranty, installation, recommended use, or other product attributes that are not specifically addressed herein.

System 1E: Direct-to-Deck for Supre, Dura, Ulta and Eura Panels

Slope:	Shall be in accordance with the FBC.
Roof Deck:	Solid or closely fitted min. 19/32-inch, 40/20 span rated, 4-ply, CDX plywood sheathing for new and existing construction at max. 24-inch span; Designed by others in accordance with FBC requirements.
Underlayment:	Installed in accordance with the FBC. In the HVHZ, at the rake and eave, underlayment shall be wrapped over the eave and down the fascia prior to installing the drip edge metal. In the HVHZ, the valley pan shall be sealed to the underlayment on each edge with a continuous 3/4-inch wide bead of a*pproved* sealant.
Attachment:	See Appendix A for fastening patterns; #12-15 x min. 1.5-inch TIMPTAPP M3TT, Hi-Lo threaded screws with sealing washer or #12 x min. 1.5-inch WoodZip SCAMP CHWH 304SS, Hi-Lo threaded screws attached at a rate of **"10 screws per panel"** for Supre, Dura and Ulta Panel or **"12 screws per panel"** for Eura Panel; Panel laps stitched with 1/4"-14 x 7/8-inch SteelZIP SCAMP stitch screws at the preformed locations. Fasteners shall penetrate the deck a minimum 3/8-inch and shall be corrosion resistant in accordance with section 1507.4.4 and 1506.6.
Maximum Design Pressures:	**-101 psf** *Pressure calculated using 2:1 margin of safety per 1504.9*

Maximum Mean Roof
Slopes 2:12 – 12:12

Exposure	Basic Wind Speed (mph)								
	≤120	130	140	150	160	170	180	190	200
Zone 1 for Gable/Hip Roofs									
B	60 ft	60 ft	60 ft	60 ft	60 ft	60 ft	60 ft	60 ft	60 ft
C	60 ft	60 ft	60 ft	60 ft	60 ft	60 ft	51 ft	30 ft	18 ft
D	60 ft	60 ft	60 ft	60 ft	60 ft	40 ft	20 ft	NA	NA
Zone 2 for Gable Roofs and Zones 2 & 3 for Hip Roofs									
B	60 ft	60 ft	60 ft	60 ft	60 ft	60 ft	60 ft	40 ft	27 ft
C	60 ft	60 ft	60 ft	60 ft	41 ft	23 ft	NA	NA	NA
D	60 ft	60 ft	60 ft	34 ft	16 ft	NA	NA	NA	NA
Zone 3 for Gable Roofs									
B	60 ft	60 ft	60 ft	60 ft	52 ft	33 ft	21 ft	NA	NA
C	60 ft	60 ft	40 ft	20 ft	NA	NA	NA	NA	NA
D	60 ft	37 ft	15 ft	NA	NA	NA	NA	NA	NA

Notes: 1) Exposure category for the structure location shall be as defined in the Florida Building Code 2) Limitations are based on an effective wind area of 10ft^2 or less 3) Topographic factors such as escarpments or hills are not included in the above assessment 4) Applicable for Enclosed Buildings without overhangs 5) NA = "Not Allowed" 6) K_d = 0.85 7) K_e = 1.0 8) Projects with mean roof heights of greater than 60 ft shall be evaluated by a licensed design professional 9) See page 18 for details for dimensions and locales of Zone 1, 2, and 3 10) V_{ult} is shown in the tables above. Design wind loads are calculated using $V_{asd} = V_{ult}\sqrt{0.6}$ per 1609.3.1.

This evaluation report is provided for State of Florida product approval under Rule 61G20-3. The manufacturer shall notify CREEK Technical Services, LLC of any product changes or quality assurance changes throughout the duration for which this report is valid. This evaluation report does not express nor imply warranty, installation, recommended use, or other product attributes that are not specifically addressed herein.

System 1F: Direct-to-Deck for Supre, Dura, Ulta and Eura Panels

Slope:	Shall be in accordance with the FBC.
Roof Deck:	Solid or closely fitted min. 19/32-inch, 40/20 span rated, 4-ply, CDX plywood sheathing for new and existing construction at max. 24-inch span; Designed by others in accordance with FBC requirements.
Underlayment:	Installed in accordance with the FBC. In the HVHZ, at the rake and eave, underlayment shall be wrapped over the eave and down the fascia prior to installing the drip edge metal. In the HVHZ, the valley pan shall be sealed to the underlayment on each edge with a continuous 3/4-inch wide bead of a*pproved* sealant.
Attachment:	See Appendix A for fastening patterns; #12-15 x min. 1.5-inch TIMPTAPP M3TT, Hi-Lo threaded screws with sealing washer or #12 x min. 1.5-inch WoodZip SCAMP CHWH 304SS, Hi-Lo threaded screws attached at a rate of **"20 screws per panel"** for Supre, Dura and Ulta Panel or **"24 screws per panel"** for Eura Panel; Panel laps stitched with 1/4"-14 x 7/8-inch SteelZIP SCAMP stitch screws at the preformed locations. Fasteners shall penetrate the deck a minimum 3/8-inch and shall be corrosion resistant in accordance with section 1507.4.4 and 1506.6.
Maximum Design Pressures:	**-176 psf** *Pressure calculated using 2:1 margin of safety per 1504.9*

Maximum Mean Roof
Slopes 2:12 – 12:12

Exposure	Basic Wind Speed (mph)								
	≤120	130	140	150	160	170	180	190	200
Zone 1 for Gable/Hip Roofs									
B	60 ft	60 ft	60 ft	60 ft	60 ft	60 ft	60 ft	60 ft	60 ft
C	60 ft	60 ft	60 ft	60 ft	60 ft	60 ft	60 ft	60 ft	60 ft
D	60 ft	60 ft	60 ft	60 ft	60 ft	60 ft	60 ft	60 ft	60 ft
Zone 2 for Gable Roofs and Zones 2 & 3 for Hip Roofs									
B	60 ft	60 ft	60 ft	60 ft	60 ft	60 ft	60 ft	60 ft	60 ft
C	60 ft	60 ft	60 ft	60 ft	60 ft	60 ft	60 ft	60 ft	60 ft
D	60 ft	60 ft	60 ft	60 ft	60 ft	60 ft	60 ft	54 ft	30 ft
Zone 3 for Gable Roofs									
B	60 ft	60 ft	60 ft	60 ft	60 ft	60 ft	60 ft	60 ft	60 ft
C	60 ft	60 ft	60 ft	60 ft	60 ft	60 ft	52 ft	31 ft	18 ft
D	60 ft	60 ft	60 ft	60 ft	60 ft	41 ft	21 ft	NA	NA

Notes: 1) Exposure category for the structure location shall be as defined in the Florida Building Code 2) Limitations are based on an effective wind area of 10ft^2 or less 3) Topographic factors such as escarpments or hills are not included in the above assessment 4) Applicable for Enclosed Buildings without overhangs 5) NA = "Not Allowed" 6) K_d = 0.85 7) K_e = 1.0 8) Projects with mean roof heights of greater than 60 ft shall be evaluated by a licensed design professional 9) See page 18 for details for dimensions and locales of Zone 1, 2, and 3 10) V_{ult} is shown in the tables above. Design wind loads are calculated using $V_{asd} = V_{ult}\sqrt{0.6}$ per 1609.3.1.

This evaluation report is provided for State of Florida product approval under Rule 61G20-3. The manufacturer shall notify CREEK Technical Services, LLC of any product changes or quality assurance changes throughout the duration for which this report is valid. This evaluation report does not express nor imply warranty, installation, recommended use, or other product attributes that are not specifically addressed herein.

System 1G: Direct-to-Deck for Como Panel

Slope:	Shall be in accordance with the FBC.
Roof Deck:	Solid or closely fitted min. 15/32-inch, 32/16 span rated, 4-ply, CDX plywood sheathing for new and existing construction at max. 24-inch span; In the HVHZ, new construction shall be min. 19/32-inch, 40/20 span rated, CDX plywood at max. 24-inch span; Designed by others in accordance with FBC requirements.
Underlayment:	Installed in accordance with the FBC. In the HVHZ, at the rake and eave, underlayment shall be wrapped over the eave and down the fascia prior to installing the drip edge metal. In the HVHZ, the valley pan shall be sealed to the underlayment on each edge with a continuous 3/4-inch wide bead of a*pproved* sealant.
Attachment:	See Appendix A for fastening patterns; #12-15 x min. 1.5-inch TIMPTAPP M3TT, Hi-Lo threaded screws with sealing washer or #12 x min. 1.5-inch WoodZip SCAMP CHWH 304SS, Hi-Lo threaded screws attached at a rate of **"10 screws per panel"**; Panel laps stitched with 1/4"-14 x 7/8-inch SteelZIP SCAMP stitch screws, (3) screws placed at each side lap and (4) additional screws placed at the head lap in the designated locations; Fasteners shall penetrate the deck a minimum 3/8-inch and shall be corrosion resistant in accordance with section 1507.4.4 and 1506.6.
Maximum Design Pressures:	**-93.5 psf** *Pressure calculated using 2:1 margin of safety per 1504.9*

Maximum Mean Roof Heights
Slopes 2:12 – 12:12

Exposure	Basic Wind Speed (mph)								
	≤120	130	140	150	160	170	180	190	200
Zone 1 for Gable/Hip Roofs									
B	60 ft	60 ft	60 ft	60 ft	60 ft	60 ft	60 ft	60 ft	58 ft
C	60 ft	60 ft	60 ft	60 ft	60 ft	60 ft	35 ft	20 ft	NA
D	60 ft	60 ft	60 ft	60 ft	51 ft	25 ft	NA	NA	NA
Zone 2 for Gable Roofs and Zones 2 & 3 for Hip Roofs									
B	60 ft	60 ft	60 ft	60 ft	60 ft	60 ft	45 ft	30 ft	20 ft
C	60 ft	60 ft	60 ft	54 ft	28 ft	15 ft	NA	NA	NA
D	60 ft	60 ft	48 ft	21 ft	NA	NA	NA	NA	NA
Zone 3 for Gable Roofs									
B	60 ft	60 ft	60 ft	60 ft	39 ft	24 ft	16 ft	NA	NA
C	60 ft	58 ft	28 ft	NA	NA	NA	NA	NA	NA
D	59 ft	23 ft	NA	NA	NA	NA	NA	NA	NA

Notes: 1) Exposure category for the structure location shall be as defined in the Florida Building Code 2) Limitations are based on an effective wind area of 10ft^2 or less 3) Topographic factors such as escarpments or hills are not included in the above assessment 4) Applicable for Enclosed Buildings without overhangs 5) NA = "Not Allowed" 6) K_d = 0.85 7) K_e = 1.0 8) Projects with mean roof heights of greater than 60 ft shall be evaluated by a licensed design professional 9) See page 18 for details for dimensions and locales of Zone 1, 2, and 3 10) V_{ult} is shown in the tables above. Design wind loads are calculated using $V_{asd} = V_{ult}\sqrt{0.6}$ per 1609.3.1.

This evaluation report is provided for State of Florida product approval under Rule 61G20-3. The manufacturer shall notify CREEK Technical Services, LLC of any product changes or quality assurance changes throughout the duration for which this report is valid. This evaluation report does not express nor imply warranty, installation, recommended use, or other product attributes that are not specifically addressed herein.

System 1H: Direct-to-Deck for Como Panel

Slope:	Shall be in accordance with the FBC.
Roof Deck:	Solid or closely fitted min. 15/32-inch, 32/16 span rated, 4-ply, CDX plywood sheathing for new and existing construction at max. 24-inch span; In the HVHZ, new construction shall be min. 19/32-inch, 40/20 span rated, CDX plywood at max. 24-inch span; Designed by others in accordance with FBC requirements.
Underlayment:	Installed in accordance with the FBC. In the HVHZ, at the rake and eave, underlayment shall be wrapped over the eave and down the fascia prior to installing the drip edge metal. In the HVHZ, the valley pan shall be sealed to the underlayment on each edge with a continuous 3/4-inch wide bead of a*pproved* sealant.
Attachment:	See Appendix A for fastening patterns; #12-15 x min. 1.5-inch TIMPTAPP M3TT, Hi-Lo threaded screws with sealing washer or #12 x min. 1.5-inch WoodZip SCAMP CHWH 304SS, Hi-Lo threaded screws attached at a rate of **"20 screws per panel"**; Panel laps stitched with 1/4"-14 x 7/8-inch SteelZIP SCAMP stitch screws, (3) screws placed at each side lap and (4) additional screws placed at the head lap in the designated locations; Fasteners shall penetrate the deck a minimum 3/8-inch and shall be corrosion resistant in accordance with section 1507.4.4 and 1506.6.
Maximum Design Pressures:	**-146 psf** *Pressure calculated using 2:1 margin of safety per 1504.9*

Maximum Mean Roof Heights
Slopes 2:12 – 12:12

Exposure	Basic Wind Speed (mph)								
	≤120	130	140	150	160	170	180	190	200
Zone 1 for Gable/Hip Roofs									
B	60 ft	60 ft	60 ft	60 ft	60 ft	60 ft	60 ft	60 ft	60 ft
C	60 ft	60 ft	60 ft	60 ft	60 ft	60 ft	60 ft	60 ft	60 ft
D	60 ft	60 ft	60 ft	60 ft	60 ft	60 ft	60 ft	60 ft	51 ft
Zone 2 for Gable Roofs and Zones 2 & 3 for Hip Roofs									
B	60 ft	60 ft	60 ft	60 ft	60 ft	60 ft	60 ft	60 ft	60 ft
C	60 ft	60 ft	60 ft	60 ft	60 ft	60 ft	60 ft	47 ft	28 ft
D	60 ft	60 ft	60 ft	60 ft	60 ft	60 ft	34 ft	18 ft	NA
Zone 3 for Gable Roofs									
B	60 ft	60 ft	60 ft	60 ft	60 ft	60 ft	60 ft	57 ft	39 ft
C	60 ft	60 ft	60 ft	60 ft	60 ft	37 ft	21 ft	NA	NA
D	60 ft	60 ft	60 ft	59 ft	28 ft	NA	NA	NA	NA

Notes: 1) Exposure category for the structure location shall be as defined in the Florida Building Code 2) Limitations are based on an effective wind area of 10ft^2 or less 3) Topographic factors such as escarpments or hills are not included in the above assessment 4) Applicable for Enclosed Buildings without overhangs 5) NA = "Not Allowed" 6) K_d = 0.85 7) K_e = 1.0 8) Projects with mean roof heights of greater than 60 ft shall be evaluated by a licensed design professional 9) See page 18 for details for dimensions and locales of Zone 1, 2, and 3 10) V_{ult} is shown in the tables above. Design wind loads are calculated using $V_{asd} = V_{ult}\sqrt{0.6}$ per 1609.3.1.

This evaluation report is provided for State of Florida product approval under Rule 61G20-3. The manufacturer shall notify CREEK Technical Services, LLC of any product changes or quality assurance changes throughout the duration for which this report is valid. This evaluation report does not express nor imply warranty, installation, recommended use, or other product attributes that are not specifically addressed herein.

System 1I: Direct-to-Deck for Como Panel

Slope:	Shall be in accordance with the FBC.
Roof Deck:	Solid or closely fitted min. 19/32-inch, 40/20 span rated, 4-ply, CDX plywood sheathing for new and existing construction at max. 24-inch span; Designed by others in accordance with FBC requirements.
Underlayment:	Installed in accordance with the FBC. In the HVHZ, at the rake and eave, underlayment shall be wrapped over the eave and down the fascia prior to installing the drip edge metal. In the HVHZ, the valley pan shall be sealed to the underlayment on each edge with a continuous 3/4-inch wide bead of a*pproved* sealant.
Attachment:	See Appendix A for fastening patterns; #12-15 x min. 1.5-inch TIMPTAPP M3TT, Hi-Lo threaded screws with sealing washer or #12 x min. 1.5-inch WoodZip SCAMP CHWH 304SS, Hi-Lo threaded screws attached at a rate of **"10 screws per panel"**; Panel laps stitched with 1/4"-14 x 7/8-inch SteelZIP SCAMP stitch screws, (3) screws placed at each side lap and (4) additional screws placed at the head lap in the designated locations; Fasteners shall penetrate the deck a minimum 3/8-inch and shall be corrosion resistant in accordance with section 1507.4.4 and 1506.6.
Maximum Design Pressures:	**-123.5 psf** *Pressure calculated using 2:1 margin of safety per 1504.9*

Maximum Mean Roof Heights
Slopes 2:12 – 12:12

Exposure	Basic Wind Speed (mph)								
	≤120	130	140	150	160	170	180	190	200
Zone 1 for Gable/Hip Roofs									
B	60 ft	60 ft	60 ft	60 ft	60 ft	60 ft	60 ft	60 ft	60 ft
C	60 ft	60 ft	60 ft	60 ft	60 ft	60 ft	60 ft	60 ft	49 ft
D	60 ft	60 ft	60 ft	60 ft	60 ft	60 ft	60 ft	35 ft	19 ft
Zone 2 for Gable Roofs and Zones 2 & 3 for Hip Roofs									
B	60 ft	60 ft	60 ft	60 ft	60 ft	60 ft	60 ft	60 ft	57 ft
C	60 ft	60 ft	60 ft	60 ft	60 ft	60 ft	35 ft	20 ft	NA
D	60 ft	60 ft	60 ft	60 ft	51 ft	25 ft	NA	NA	NA
Zone 3 for Gable Roofs									
B	60 ft	60 ft	60 ft	60 ft	60 ft	60 ft	46 ft	30 ft	20 ft
C	60 ft	60 ft	60 ft	55 ft	29 ft	16 ft	NA	NA	NA
D	60 ft	60 ft	50 ft	22 ft	NA	NA	NA	NA	NA

Notes: 1) Exposure category for the structure location shall be as defined in the Florida Building Code 2) Limitations are based on an effective wind area of 10ft^2 or less 3) Topographic factors such as escarpments or hills are not included in the above assessment 4) Applicable for Enclosed Buildings without overhangs 5) NA = "Not Allowed" 6) K_d = 0.85 7) K_e = 1.0 8) Projects with mean roof heights of greater than 60 ft shall be evaluated by a licensed design professional 9) See page 18 for details for dimensions and locales of Zone 1, 2, and 3 10) V_{ult} is shown in the tables above. Design wind loads are calculated using $V_{asd} = V_{ult}\sqrt{0.6}$ per 1609.3.1.

This evaluation report is provided for State of Florida product approval under Rule 61G20-3. The manufacturer shall notify CREEK Technical Services, LLC of any product changes or quality assurance changes throughout the duration for which this report is valid. This evaluation report does not express nor imply warranty, installation, recommended use, or other product attributes that are not specifically addressed herein.

System 1J: Direct-to-Deck for Como Panel

Slope:	Shall be in accordance with the FBC.
Roof Deck:	Solid or closely fitted min. 19/32-inch, 40/20 span rated, 4-ply, CDX plywood sheathing for new and existing construction at max. 24-inch span; Designed by others in accordance with FBC requirements.
Underlayment:	Installed in accordance with the FBC. In the HVHZ, at the rake and eave, underlayment shall be wrapped over the eave and down the fascia prior to installing the drip edge metal. In the HVHZ, the valley pan shall be sealed to the underlayment on each edge with a continuous 3/4-inch wide bead of a*pproved* sealant.
Attachment:	See Appendix A for fastening patterns; #12-15 x min. 1.5-inch TIMPTAPP M3TT, Hi-Lo threaded screws with sealing washer or #12 x min. 1.5-inch WoodZip SCAMP CHWH 304SS, Hi-Lo threaded screws attached at a rate of **"20 screws per panel"**; Panel laps stitched with 1/4"-14 x 7/8-inch SteelZIP SCAMP stitch screws, (3) screws placed at each side lap and (4) additional screws placed at the head lap in the designated locations; Fasteners shall penetrate the deck a minimum 3/8-inch and shall be corrosion resistant in accordance with section 1507.4.4 and 1506.6.
Maximum Design Pressures:	**-191 psf** *Pressure calculated using 2:1 margin of safety per 1504.9*

Maximum Mean Roof Heights
Slopes 2:12 – 12:12

Exposure	Basic Wind Speed (mph)								
	≤120	130	140	150	160	170	180	190	200
Zone 1 for Gable/Hip Roofs									
B	60 ft	60 ft	60 ft	60 ft	60 ft	60 ft	60 ft	60 ft	60 ft
C	60 ft	60 ft	60 ft	60 ft	60 ft	60 ft	60 ft	60 ft	60 ft
D	60 ft	60 ft	60 ft	60 ft	60 ft	60 ft	60 ft	60 ft	60 ft
Zone 2 for Gable Roofs and Zones 2 & 3 for Hip Roofs									
B	60 ft	60 ft	60 ft	60 ft	60 ft	60 ft	60 ft	60 ft	60 ft
C	60 ft	60 ft	60 ft	60 ft	60 ft	60 ft	60 ft	60 ft	60 ft
D	60 ft	60 ft	60 ft	60 ft	60 ft	60 ft	60 ft	60 ft	48 ft
Zone 3 for Gable Roofs									
B	60 ft	60 ft	60 ft	60 ft	60 ft	60 ft	60 ft	60 ft	60 ft
C	60 ft	60 ft	60 ft	60 ft	60 ft	60 ft	60 ft	46 ft	28 ft
D	60 ft	60 ft	60 ft	60 ft	60 ft	60 ft	34 ft	18 ft	NA

Notes: 1) Exposure category for the structure location shall be as defined in the Florida Building Code 2) Limitations are based on an effective wind area of 10ft^2 or less 3) Topographic factors such as escarpments or hills are not included in the above assessment 4) Applicable for Enclosed Buildings without overhangs 5) NA = "Not Allowed" 6) K_d = 0.85 7) K_e = 1.0 8) Projects with mean roof heights of greater than 60 ft shall be evaluated by a licensed design professional 9) See page 18 for details for dimensions and locales of Zone 1, 2, and 3 10) V_{ult} is shown in the tables above. Design wind loads are calculated using $V_{asd} = V_{ult}\sqrt{0.6}$ per 1609.3.1.

This evaluation report is provided for State of Florida product approval under Rule 61G20-3. The manufacturer shall notify CREEK Technical Services, LLC of any product changes or quality assurance changes throughout the duration for which this report is valid. This evaluation report does not express nor imply warranty, installation, recommended use, or other product attributes that are not specifically addressed herein.

System 2A: Batten/Counter Batten for Supre, Dura, Ulta and Eura Panels

Slope:	Shall be in accordance with the FBC.
Roof Deck:	Solid or closely fitted min. 15/32-inch, 32/16 span rated, 4-ply, CDX plywood sheathing for new and existing construction at max. 24-inch span; In the HVHZ, new construction shall be min. 19/32-inch, 40/20 span rated, CDX plywood at max. 24-inch span; Designed by others in accordance with FBC requirements.
Underlayment:	Installed in accordance with the FBC. In the HVHZ, at the rake and eave, underlayment shall be wrapped over the eave and down the fascia prior to installing the drip edge metal.
Counter Batten:	1x4 No. 2 SYP lumber laid maximum 24-inch o.c. over the plywood deck trusses/rafters and perpendicular to the eave
Batten:	2x4 No. 2 SYP lumber installed 14-inch o.c. and perpendicular to the counter batten. Two (2) 3.5-inch x #10 stainless steel deck screws installed at each batten/counter batten intersection through plywood deck into the wood trusses/rafters.
Attachment:	See Appendix A for fastening patterns; 4.8mm x 35mm HWH screws with 14 mm O.D. sealing washers attached at a rate of **"5 screws per panel"** for Supre, Dura and Ulta Panels or **"6 screws per panel"** for Eura Panel; Panel laps stitched with 4.8mm x 19mm HWH screws with 14mm O.D. sealing washers at the preformed locations. Fasteners shall penetrate the deck a minimum 3/8-inch and shall be corrosion resistant in accordance with section 1507.4.4 and section 1506.6.
Maximum Design Pressures:	**-116.25 psf** *Pressure calculated using 2:1 margin of safety per 1504.9*

Maximum Mean Roof Heights
Slopes 2:12 - 12:12

Exposure	Basic Wind Speed (mph)								
	≤120	130	140	150	160	170	180	190	200
Zone 1 for Gable/Hip Roofs									
B	60 ft	60 ft	60 ft	60 ft	60 ft	60 ft	60 ft	60 ft	60 ft
C	60 ft	60 ft	60 ft	60 ft	60 ft	60 ft	60 ft	60 ft	36 ft
D	60 ft	60 ft	60 ft	60 ft	60 ft	60 ft	46 ft	25 ft	NA
Zone 2 for Gable Roofs and Zones 2 & 3 for Hip Roofs									
B	60 ft	60 ft	60 ft	60 ft	60 ft	60 ft	60 ft	60 ft	46 ft
C	60 ft	60 ft	60 ft	60 ft	60 ft	45 ft	26 ft	15 ft	NA
D	60 ft	60 ft	60 ft	60 ft	36 ft	18 ft	NA	NA	NA
Zone 3 for Gable Roofs									
B	60 ft	60 ft	60 ft	60 ft	60 ft	56 ft	36 ft	24 ft	16 ft
C	60 ft	60 ft	60 ft	41 ft	21 ft	NA	NA	NA	NA
D	60 ft	60 ft	35 ft	16 ft	NA	NA	NA	NA	NA

Notes: 1) Exposure category for the structure location shall be as defined in the Florida Building Code 2) Limitations are based on an effective wind area of $10ft^2$ or less 3) Topographic factors such as escarpments or hills are not included in the above assessment 4) Applicable for Enclosed Buildings without overhangs 5) NA = "Not Allowed" 6) K_d = 0.85 7) K_e = 1.0 8) Projects with mean roof heights of greater than 60 ft shall be evaluated by a licensed design professional 9) See page 18 for details for dimensions and locales of Zone 1, 2, and 3 10) V_{ult} is shown in the tables above. Design wind loads are calculated using $V_{asd} = V_{ult}\sqrt{0.6}$ per 1609.3.1.

This evaluation report is provided for State of Florida product approval under Rule 61G20-3. The manufacturer shall notify CREEK Technical Services, LLC of any product changes or quality assurance changes throughout the duration for which this report is valid. This evaluation report does not express nor imply warranty, installation, recommended use, or other product attributes that are not specifically addressed herein.

System 2B: Batten/Counter Batten for Supre, Dura, Ulta and Eura Panels

Slope:	Shall be in accordance with the FBC.
Roof Deck:	Solid or closely fitted min. 15/32-inch, 32/16 span rated, 4-ply, CDX plywood sheathing for new and existing construction at max. 24-inch span; In the HVHZ, new construction shall be min. 19/32-inch, 40/20 span rated, CDX plywood at max. 24-inch span; Designed by others in accordance with FBC requirements.
Underlayment:	Installed in accordance with the FBC. In the HVHZ, at the rake and eave, underlayment shall be wrapped over the eave and down the fascia prior to installing the drip edge metal.
Counter Batten:	1x4 No. 2 SYP lumber laid maximum 24-inch o.c. over the plywood deck trusses/rafters and perpendicular to the eave
Batten:	2x4 No. 2 SYP lumber installed 14-inch o.c. and perpendicular to the counter batten. Two (2) 3.5-inch x #10 stainless steel deck screws installed at each batten/counter batten intersection through plywood deck into the wood trusses/rafters.
Attachment:	See Appendix A for fastening patterns; 4.8mm x 35mm HWH screws with 14 mm O.D. sealing washers attached at a rate of **"10 screws per panel"** for Supre, Dura and Ulta Panels or **"12 screws per panel"** for Eura Panel; Panel laps stitched with 4.8mm x 19mm HWH screws with 14mm O.D. sealing washers at the preformed locations. Fasteners shall penetrate the deck a minimum 3/8-inch and shall be corrosion resistant in accordance with section 1507.4.4 and Section 1506.6.
Maximum Design Pressures:	**-157.5 psf** *Pressure calculated using 2:1 margin of safety per 1504.9*

Maximum Mean Roof Heights
Slopes 2:12 – 12:12

Exposure	Basic Wind Speed (mph)								
	≤120	130	140	150	160	170	180	190	200
Zone 1 for Gable/Hip Roofs									
B	60 ft	60 ft	60 ft	60 ft	60 ft	60 ft	60 ft	60 ft	60 ft
C	60 ft	60 ft	60 ft	60 ft	60 ft	60 ft	60 ft	60 ft	60 ft
D	60 ft	60 ft	60 ft	60 ft	60 ft	60 ft	60 ft	60 ft	60 ft
Zone 2 for Gable Roofs and Zones 2 & 3 for Hip Roofs									
B	60 ft	60 ft	60 ft	60 ft	60 ft	60 ft	60 ft	60 ft	60 ft
C	60 ft	60 ft	60 ft	60 ft	60 ft	60 ft	60 ft	60 ft	41 ft
D	60 ft	60 ft	60 ft	60 ft	60 ft	60 ft	53 ft	28 ft	16 ft
Zone 3 for Gable Roofs									
B	60 ft	60 ft	60 ft	60 ft	60 ft	60 ft	60 ft	60 ft	51 ft
C	60 ft	60 ft	60 ft	60 ft	60 ft	53 ft	30 ft	18 ft	NA
D	60 ft	60 ft	60 ft	60 ft	43 ft	21 ft	NA	NA	NA

Notes: 1) Exposure category for the structure location shall be as defined in the Florida Building Code 2) Limitations are based on an effective wind area of 10ft^2 or less 3) Topographic factors such as escarpments or hills are not included in the above assessment 4) Applicable for Enclosed Buildings without overhangs 5) NA = "Not Allowed" 6) K_d = 0.85 7) K_e = 1.0 8) Projects with mean roof heights of greater than 60 ft shall be evaluated by a licensed design professional 9) See page 18 for details for dimensions and locales of Zone 1, 2, and 3 10) V_{ult} is shown in the tables above. Design wind loads are calculated using $V_{asd} = V_{ult}\sqrt{0.6}$ per 1609.3.1.

This evaluation report is provided for State of Florida product approval under Rule 61G20-3. The manufacturer shall notify CREEK Technical Services, LLC of any product changes or quality assurance changes throughout the duration for which this report is valid. This evaluation report does not express nor imply warranty, installation, recommended use, or other product attributes that are not specifically addressed herein.

System 3: Batten for Como (non-HVHZ only)	
Slope:	Shall be in accordance with the FBC.
Roof Deck:	Solid or closely fitted min. 7/16-inch span rated OSB sheathing for new and existing construction at max. 24 in. span; Designed by others in accordance with FBC requirements.
Existing Roof:	OPTIONAL single layer of existing asphalt shingles; Shall comply with FBC Section 1511
Underlayment:	Installed in accordance with FBC Section 1507.1.1 and FBC requirements.
Batten:	1x4 No. 2 SYP lumber laid maximum 13 3/4-inch o.c. parallel to the eave, starting at the eave, and secured with one (1) min. 0.113-inch x 2 3/8-inch ring shank nail spaced 12-inch o.c. staggered
Attachment:	#12-15 x min. 1.5-inch TIMPTAPP M3TT, Hi-Lo threaded screws with sealing washer or #12 x min. 2.5-inch WoodZip SCAMP CHWH 304SS, Hi-Lo threaded screws attached at a rate of **"10 screws per panel"**; Panel laps stitched with 1/4"-14 x 7/8-inch SteelZIP SCAMP stitch screws, (3) screws placed at each side lap and (4) additional screws placed at the head lap in the designated locations; Fasteners shall penetrate the deck a minimum 3/8-inch and shall be corrosion resistant in accordance with section 1507.4.4 and 1506.6.
Maximum Design Pressures:	**-86 psf** *Pressure calculated using 2:1 margin of safety per 1504.9*

Maximum Mean Roof Heights
Slopes 2:12 – 12:12

Exposure	Basic Wind Speed (mph)								
	≤120	130	140	150	160	170	180	190	200
Zone 1 for Gable/Hip Roofs									
B	60 ft	60 ft	60 ft	60 ft	60 ft	60 ft	60 ft	60 ft	42 ft
C	60 ft	60 ft	60 ft	60 ft	60 ft	41 ft	23 ft	NA	NA
D	60 ft	60 ft	60 ft	60 ft	32 ft	15 ft	NA	NA	NA
Zone 2 for Gable Roofs and Zones 2 & 3 for Hip Roofs									
B	60 ft	60 ft	60 ft	60 ft	60 ft	50 ft	32 ft	21 ft	15 ft
C	60 ft	60 ft	60 ft	35 ft	19 ft	NA	NA	NA	NA
D	60 ft	60 ft	30 ft	NA	NA	NA	NA	NA	NA
Zone 3 for Gable Roofs									
B	60 ft	60 ft	60 ft	46 ft	28 ft	18 ft	NA	NA	NA
C	60 ft	38 ft	18 ft	NA	NA	NA	NA	NA	NA
D	37 ft	15 ft	NA	NA	NA	NA	NA	NA	NA

Notes: 1) Exposure category for the structure location shall be as defined in the Florida Building Code 2) Limitations are based on an effective wind area of $10ft^2$ or less 3) Topographic factors such as escarpments or hills are not included in the above assessment 4) Applicable for Enclosed Buildings without overhangs 5) NA = "Not Allowed" 6) K_d = 0.85 7) K_e = 1.0 8) Projects with mean roof heights of greater than 60 ft shall be evaluated by a licensed design professional 9) See page 18 for details for dimensions and locales of Zone 1, 2, and 3 10) V_{ult} is shown in the tables above. Design wind loads are calculated using $V_{asd} = V_{ult}\sqrt{0.6}$ per 1609.3.1.

This evaluation report is provided for State of Florida product approval under Rule 61G20-3. The manufacturer shall notify CREEK Technical Services, LLC of any product changes or quality assurance changes throughout the duration for which this report is valid. This evaluation report does not express nor imply warranty, installation, recommended use, or other product attributes that are not specifically addressed herein.

Gable Roofs		Hip Roofs
Slopes 2:12 to 6.1:12	Slopes >6.1:12 to 12:12	Slopes 2:12 to 12:12
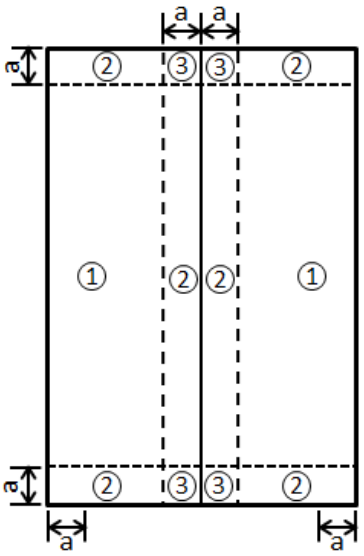	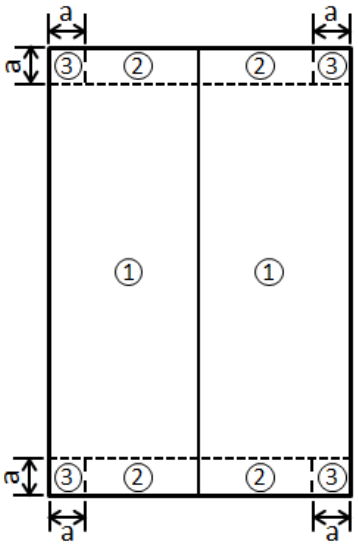	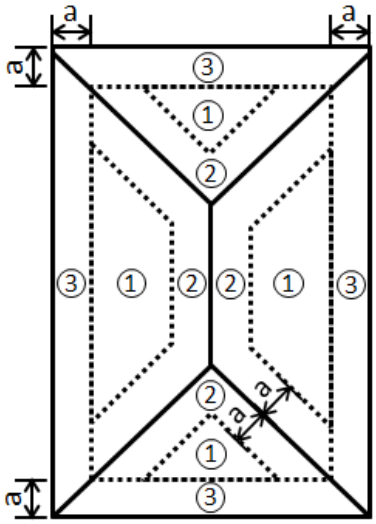

Dimension “a” shall be 10% of the least horizontal dimension or (0.4 x *Mean Roof Height)*, whichever is smaller, but not less than either 4% of the least horizontal dimension or 3ft.

LIMITATIONS

1. Fire classification is not within the scope of this evaluation.
2. The roof deck and the roof deck attachment shall be designed by others to meet the minimum design loads established for components and cladding and in accordance with FBC requirements.
3. Reroofing shall be in accordance with FBC Section 1511 outside the HVHZ and Section 1521 inside the HVHZ.
4. Installation of the evaluated products shall comply with this report, the FBC and the manufacturer’s published application instructions. Where discrepancies exist between these sources, the more restrictive and FBC compliant installation detail shall prevail.
5. All products listed in this report shall be manufactured under a quality assurance program in compliance with Rule 61G20-3.

This evaluation report is provided for State of Florida product approval under Rule 61G20-3. The manufacturer shall notify CREEK Technical Services, LLC of any product changes or quality assurance changes throughout the duration for which this report is valid. This evaluation report does not express nor imply warranty, installation, recommended use, or other product attributes that are not specifically addressed herein.

COMPLIANCE STATEMENT

This report has been prepared in accordance with F.A.C. Rule 61G20-3.

This item has been digitally signed and sealed by Zachary R. Priest, PE, on 2/11/2026.

Printed copies of this document are not considered signed and sealed and the signature must be verified on any electronic copies.

Digitally signed by Zachary R. Priest

2026.02.11 15:57:54 -05'00'

Zachary R. Priest, P.E.
Florida Registration No. 74021
Organization No. ANE9641

CERTIFICATION OF INDEPENDENCE

CREEK Technical Services, LLC does not have, nor will it acquire, a financial interest in any company manufacturing or distributing products under this evaluation.

CREEK Technical Services, LLC is not owned, operated, or controlled by any company manufacturing or distributing products under this evaluation.

Zachary R. Priest, P.E. does not have, nor will acquire, a financial interest in any company manufacturing or distributing products under this evaluation.

Zachary R. Priest, P.E. does not have, nor will acquire, a financial interest in any other entity involved in the approval process of the product.

APPENDICES

APPENDIX A – Fastening Patterns (9 pages)

This evaluation report is provided for State of Florida product approval under Rule 61G20-3. The manufacturer shall notify CREEK Technical Services, LLC of any product changes or quality assurance changes throughout the duration for which this report is valid. This evaluation report does not express nor imply warranty, installation, recommended use, or other product attributes that are not specifically addressed herein.

Systems 1A-J – Direct to Deck Fastening

Supre Panel Fastening Patterns

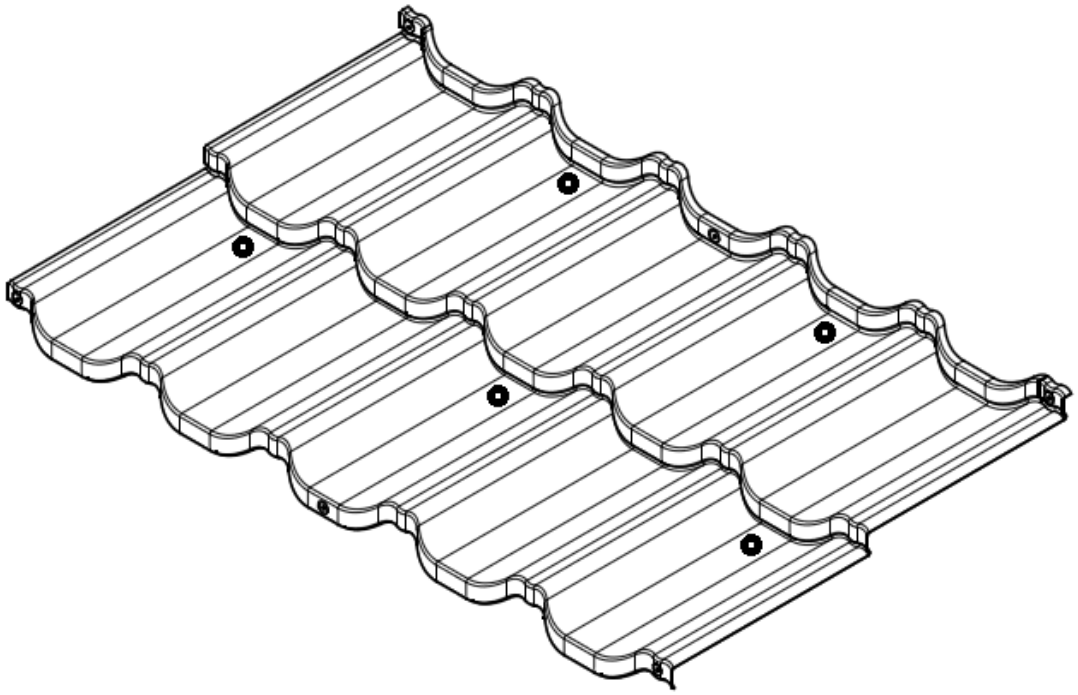

"5 screws per panel"

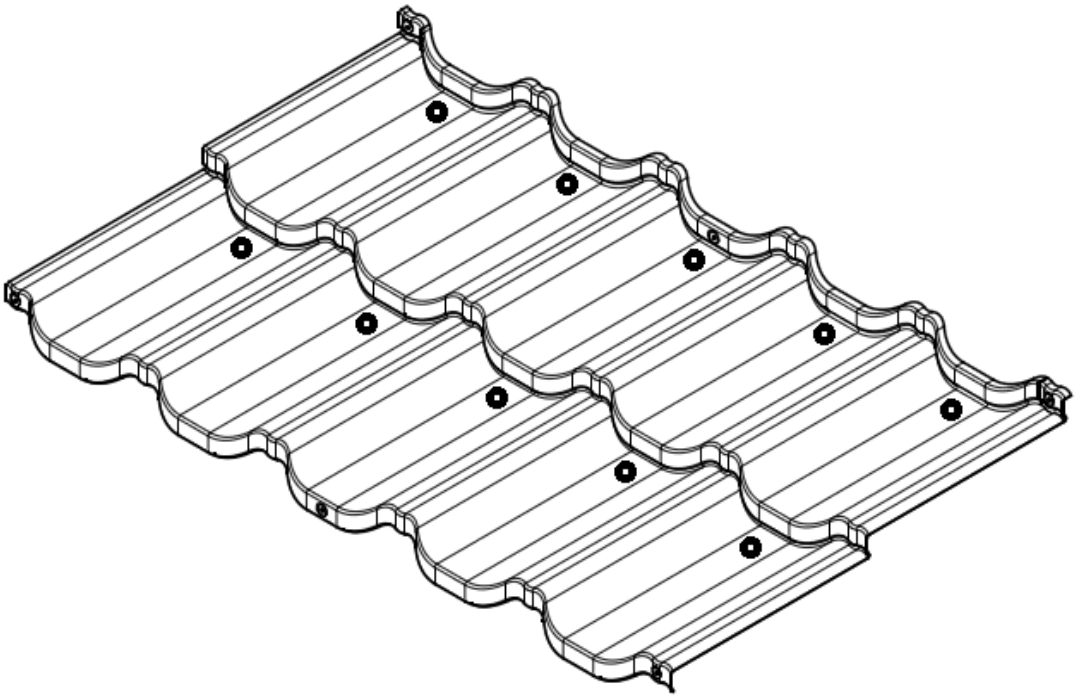

"10 screws per panel" with one (1) fastener at each indicated location.
"20 screws per panel" with two (2) fasteners at each indicated location (1-inch apart).

This evaluation report is provided for State of Florida product approval under Rule 61G20-3. The manufacturer shall notify CREEK Technical Services, LLC of any product changes or quality assurance changes throughout the duration for which this report is valid. This evaluation report does not express nor imply warranty, installation, recommended use, or other product attributes that are not specifically addressed herein.

Dura Panel Fastening Patterns

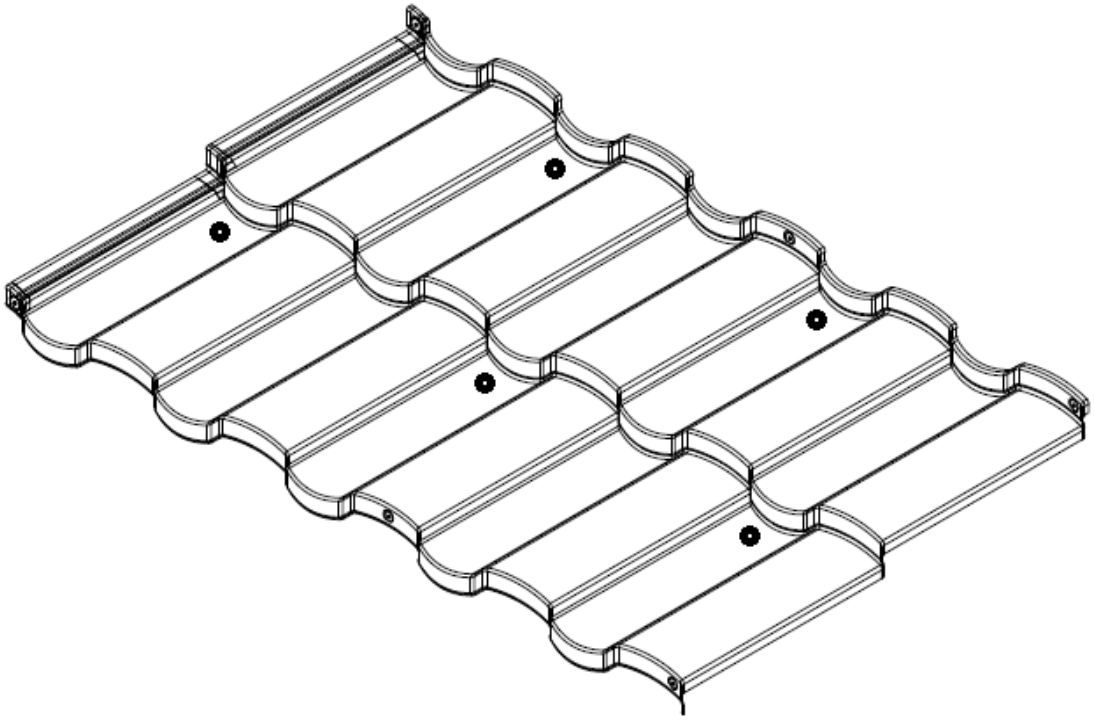

"5 screws per panel"

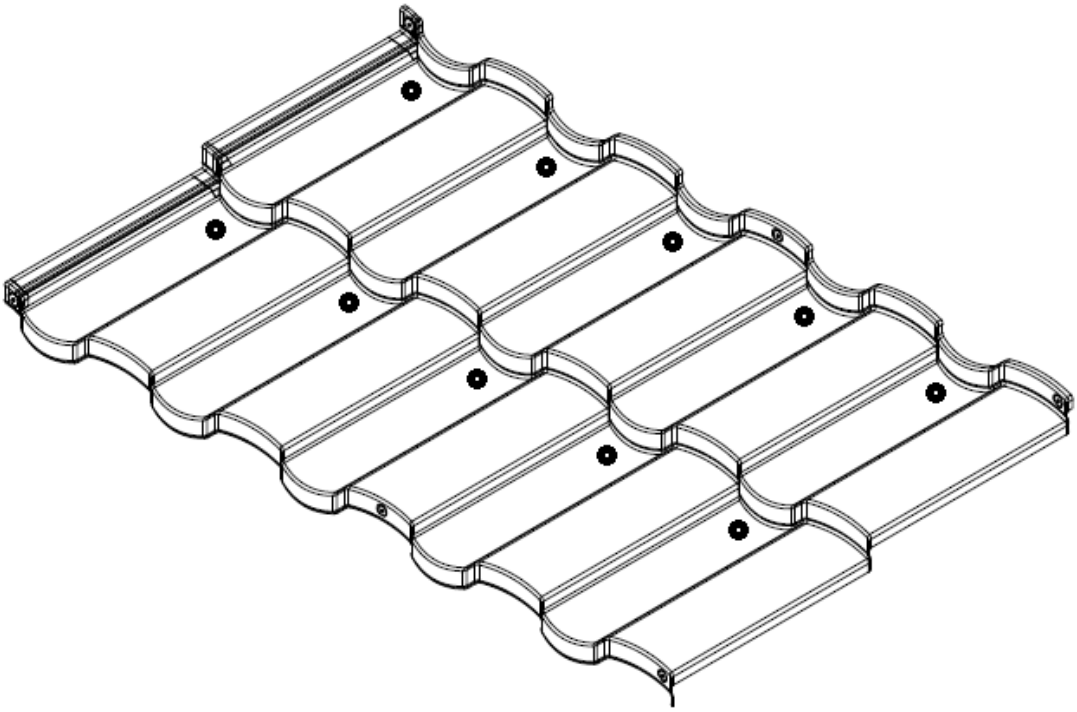

"10 screws per panel" with one (1) fastener at each indicated location.
"20 screws per panel" with two (2) fasteners at each indicated location (1-inch apart).

This evaluation report is provided for State of Florida product approval under Rule 61G20-3. The manufacturer shall notify CREEK Technical Services, LLC of any product changes or quality assurance changes throughout the duration for which this report is valid. This evaluation report does not express nor imply warranty, installation, recommended use, or other product attributes that are not specifically addressed herein.

Eura Panel Fastening Patterns

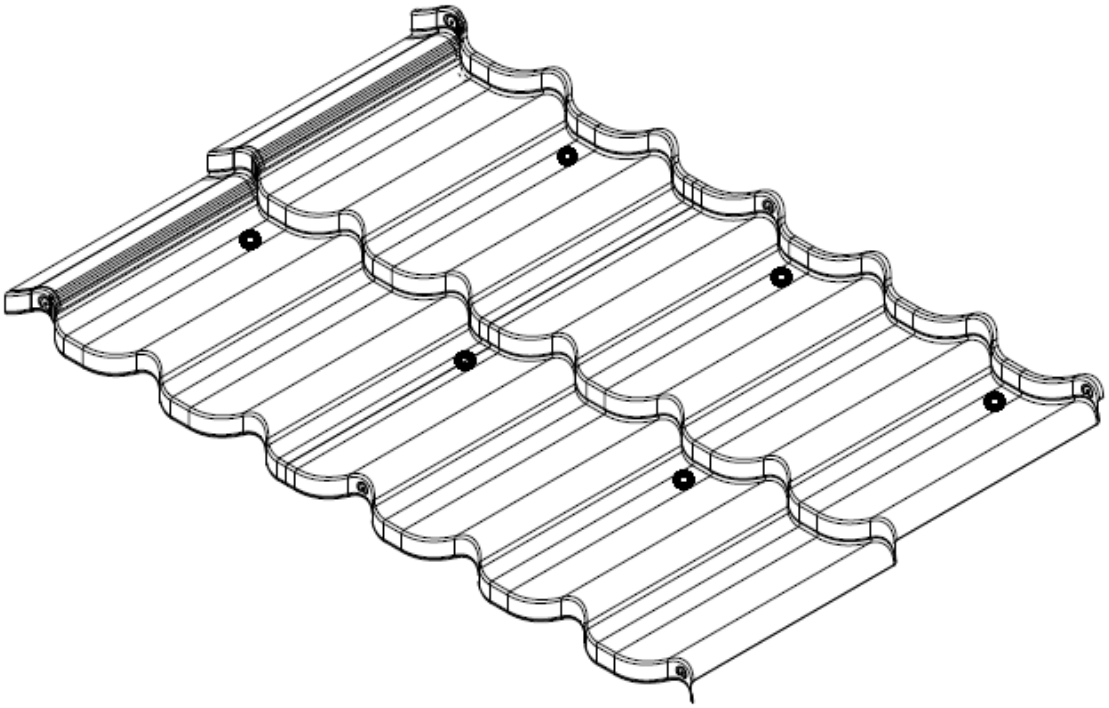

"6 screws per panel"

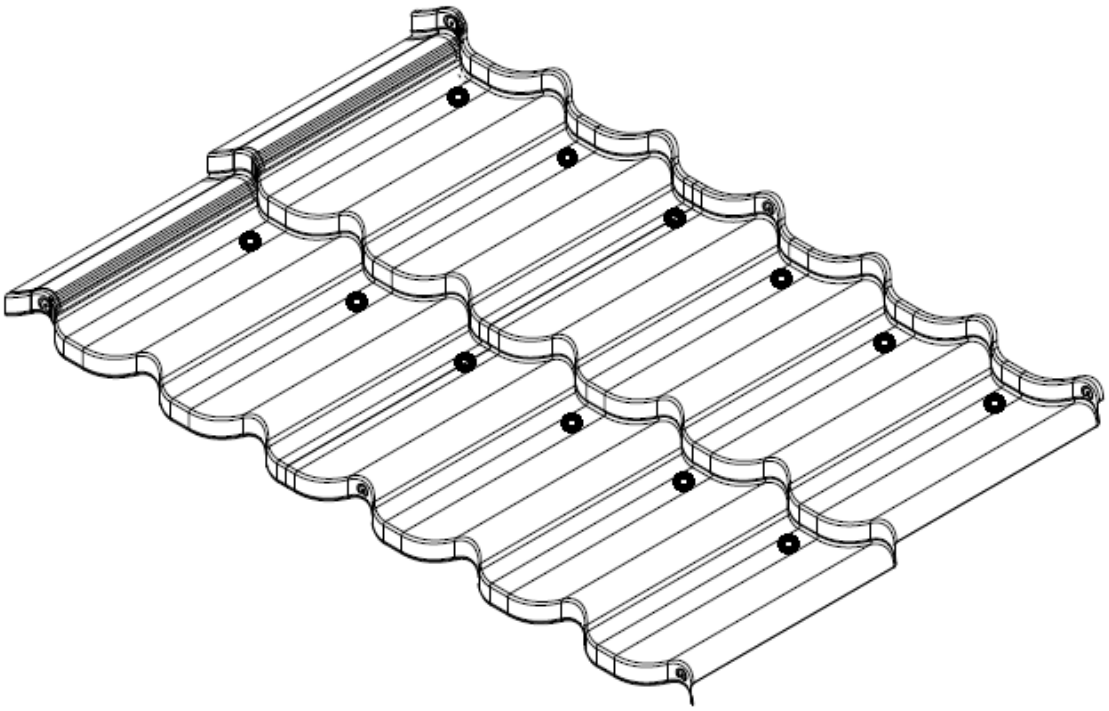

"12 screws per panel" with one (1) fastener at each indicated location.
"24 screws per panel" with two (2) fasteners at each indicated location (1-inch apart).

This evaluation report is provided for State of Florida product approval under Rule 61G20-3. The manufacturer shall notify CREEK Technical Services, LLC of any product changes or quality assurance changes throughout the duration for which this report is valid. This evaluation report does not express nor imply warranty, installation, recommended use, or other product attributes that are not specifically addressed herein.

Ulta Panel Fastening Patterns

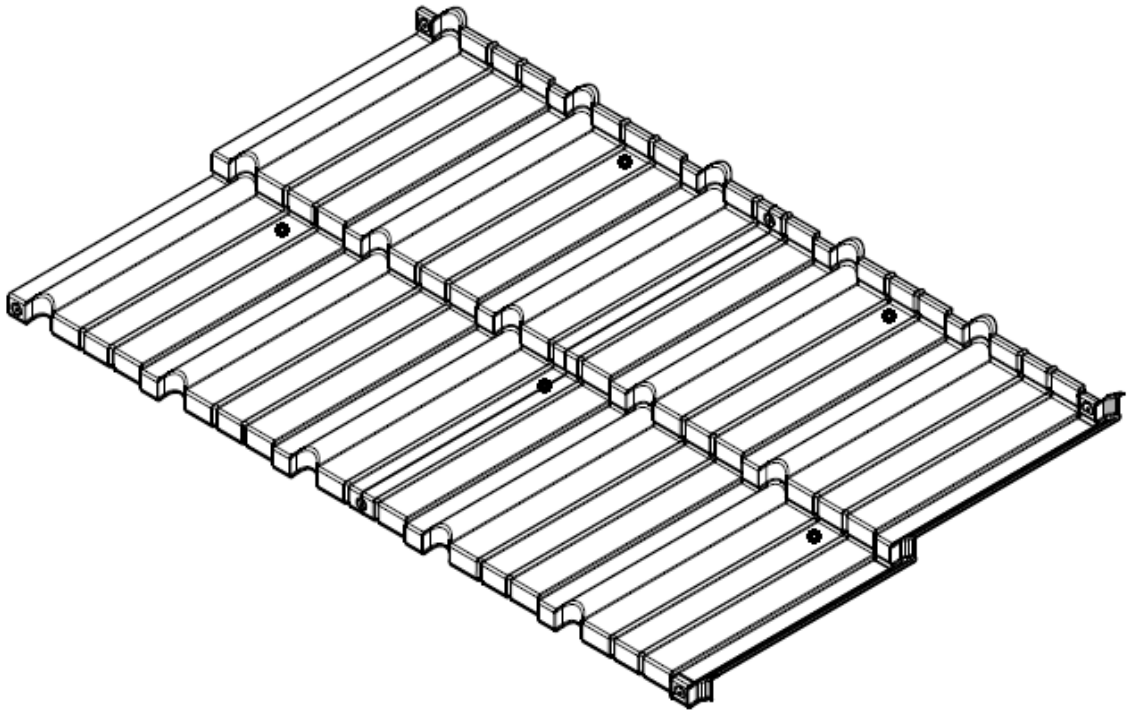

"5 screws per panel"

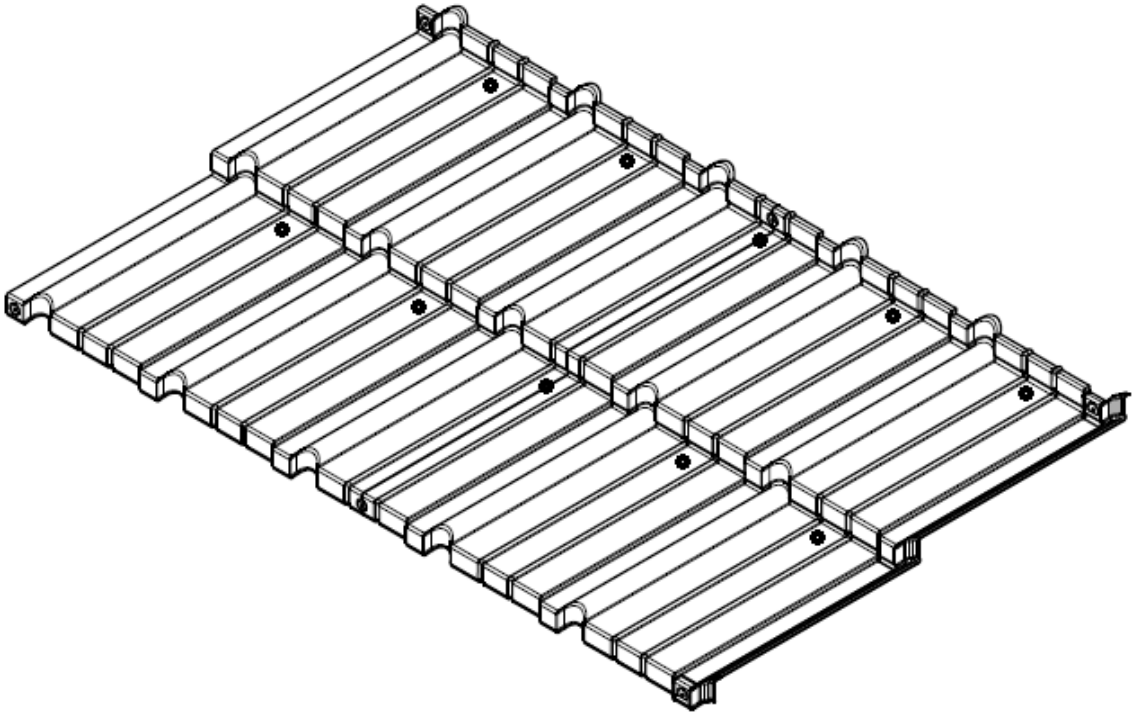

"10 screws per panel" with one (1) fastener at each indicated location.
"20 screws per panel" with two (2) fasteners at each indicated location (1-inch apart).

This evaluation report is provided for State of Florida product approval under Rule 61G20-3. The manufacturer shall notify CREEK Technical Services, LLC of any product changes or quality assurance changes throughout the duration for which this report is valid. This evaluation report does not express nor imply warranty, installation, recommended use, or other product attributes that are not specifically addressed herein.

Como Panel Fastening Patterns

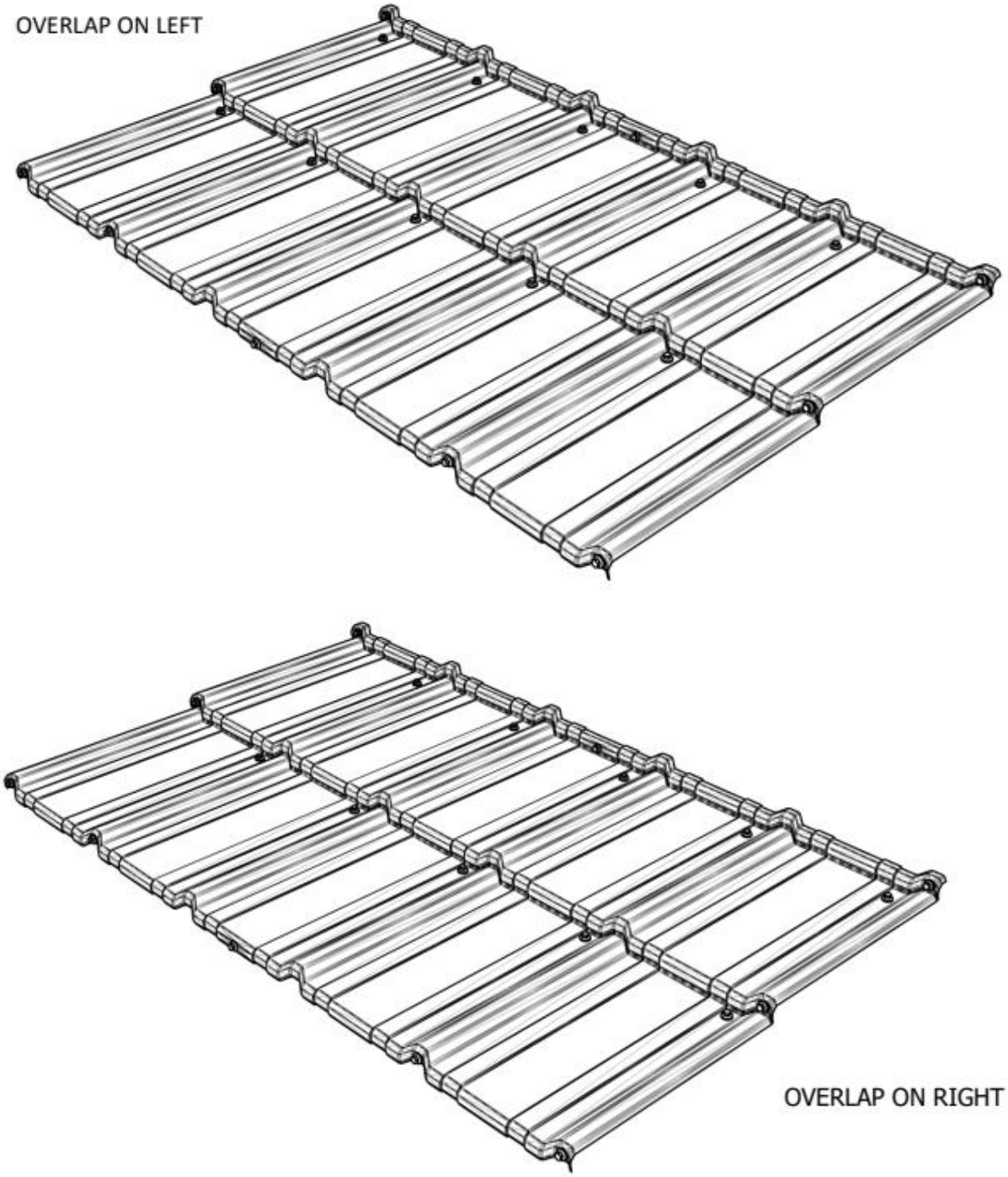

"10 screws per panel"
Fastened beneath the headlap and step, between major and minor ribs
starting 2-inches from the panel overlap and continuing 9-inches o.c. along the panel width;
Fastener rows spaced 13 3/4-inches o.c.

This evaluation report is provided for State of Florida product approval under Rule 61G20-3. The manufacturer shall notify CREEK Technical Services, LLC of any product changes or quality assurance changes throughout the duration for which this report is valid. This evaluation report does not express nor imply warranty, installation, recommended use, or other product attributes that are not specifically addressed herein.

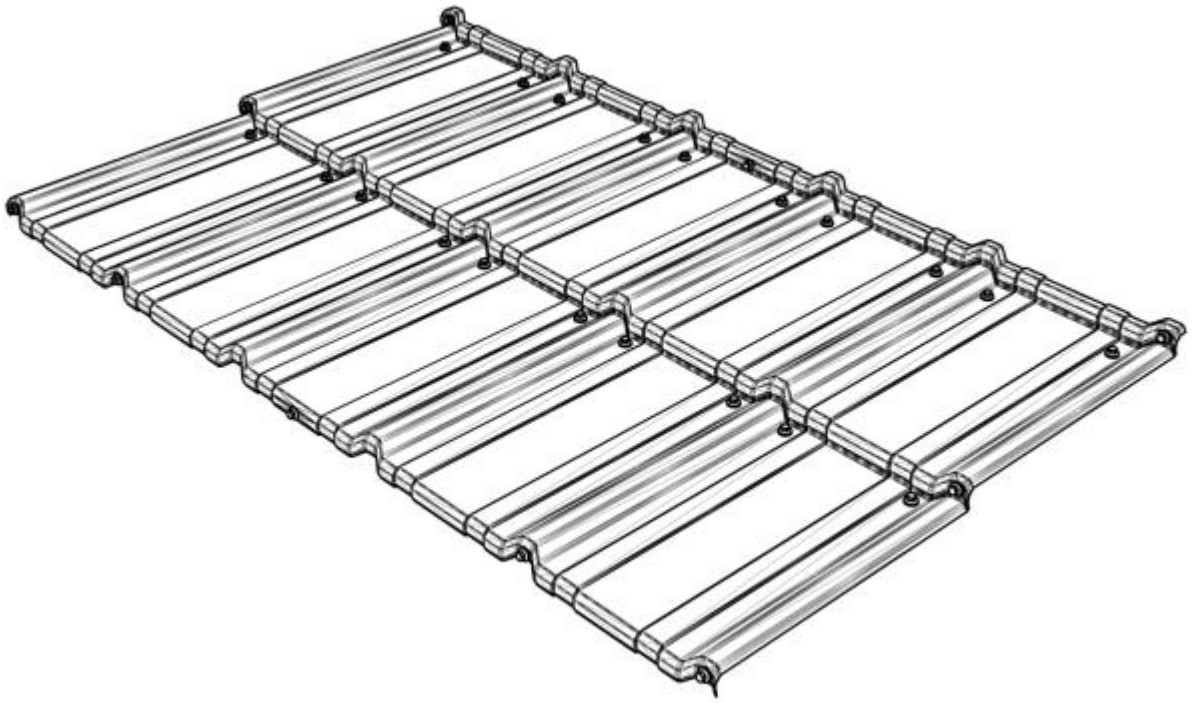

"20 screws per panel"
Fastened beneath the headlap and step, on either side of major ribs
starting 2-inches from the panel overlap and continuing in a 7"-2" o.c. pattern along the panel width;
Fastener rows spaced 13 3/4-inches o.c.

Systems 2A-B – Over Batten Fastening

Systems 2A-2B Batten/Counter Batten Fastening

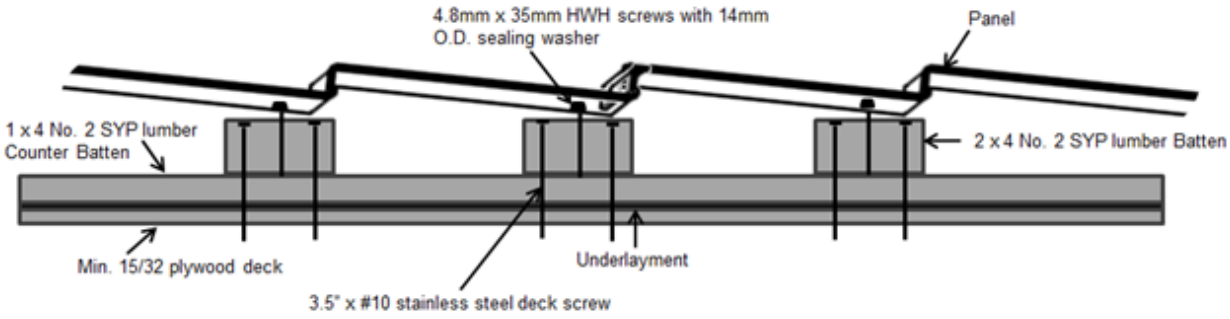

This evaluation report is provided for State of Florida product approval under Rule 61G20-3. The manufacturer shall notify CREEK Technical Services, LLC of any product changes or quality assurance changes throughout the duration for which this report is valid. This evaluation report does not express nor imply warranty, installation, recommended use, or other product attributes that are not specifically addressed herein.

Panel Connections

Supre Panel Connection

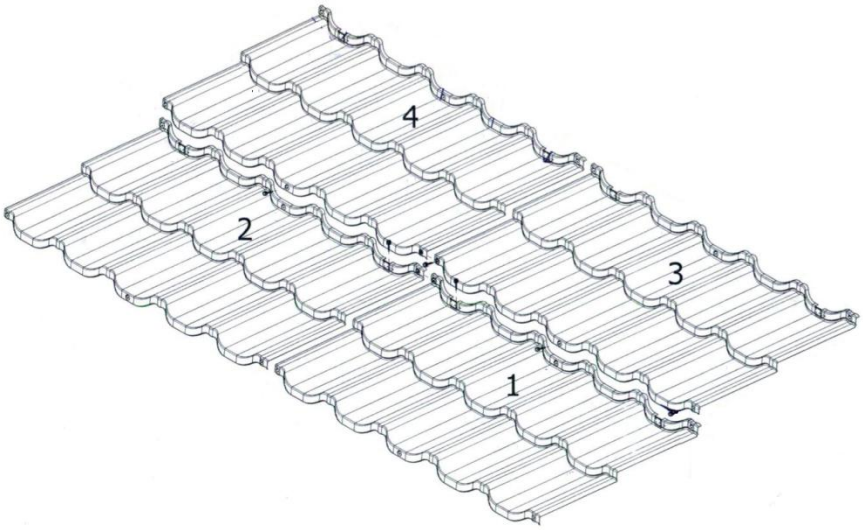

Dura Panel Connection

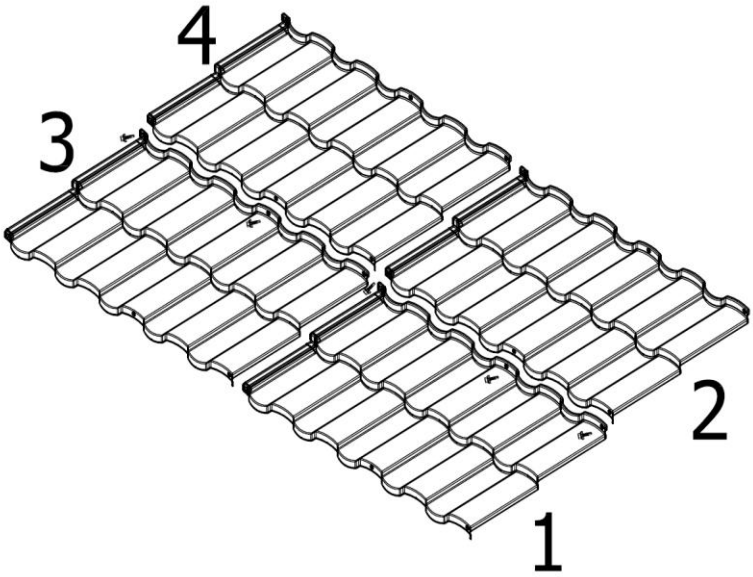

This evaluation report is provided for State of Florida product approval under Rule 61G20-3. The manufacturer shall notify CREEK Technical Services, LLC of any product changes or quality assurance changes throughout the duration for which this report is valid. This evaluation report does not express nor imply warranty, installation, recommended use, or other product attributes that are not specifically addressed herein.

Eura Panel Connection

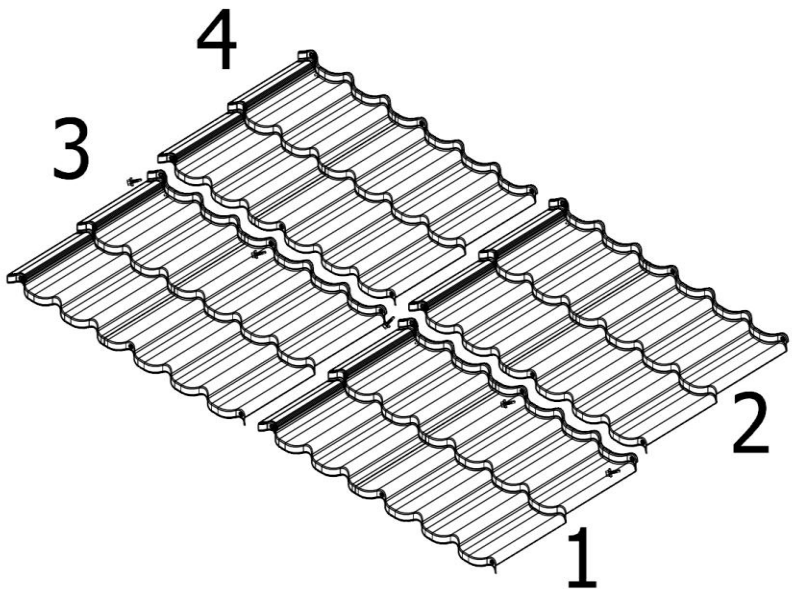

Ulta Panel Connection

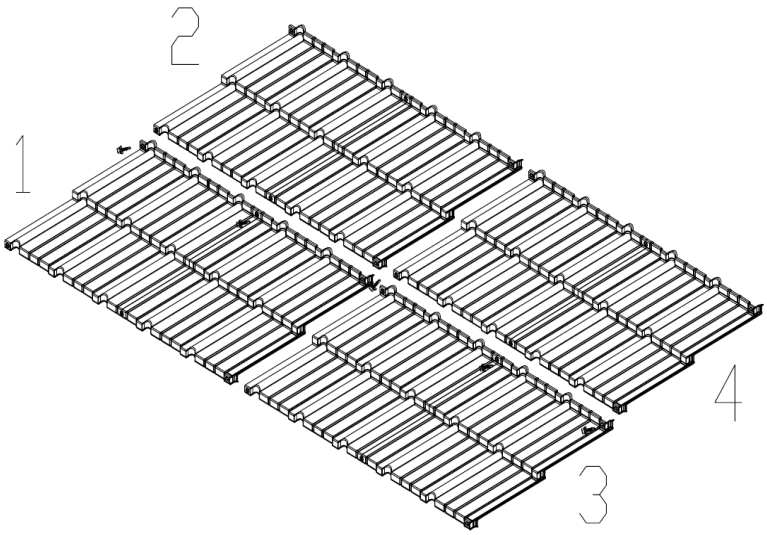

This evaluation report is provided for State of Florida product approval under Rule 61G20-3. The manufacturer shall notify CREEK Technical Services, LLC of any product changes or quality assurance changes throughout the duration for which this report is valid. This evaluation report does not express nor imply warranty, installation, recommended use, or other product attributes that are not specifically addressed herein.

Como Panel Connection – Right to Left Assembly

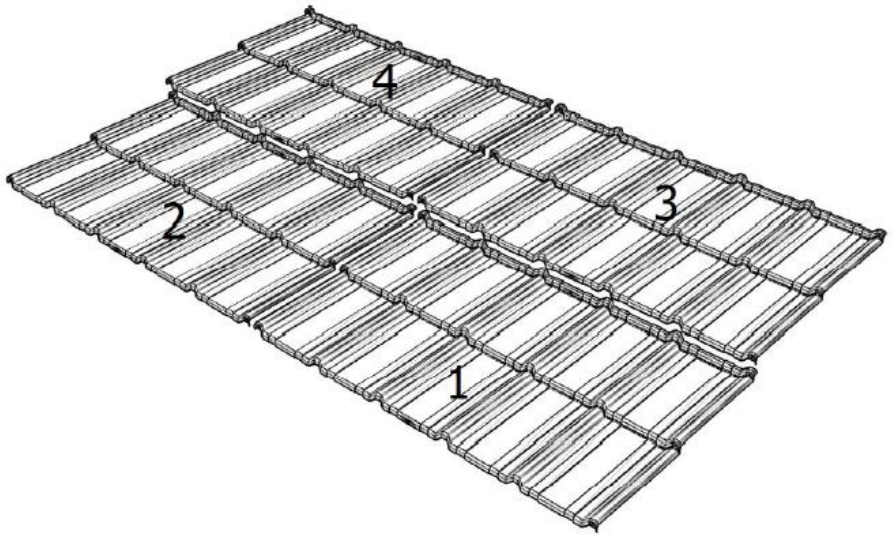

Como Panel Connection – Left to Right Assembly

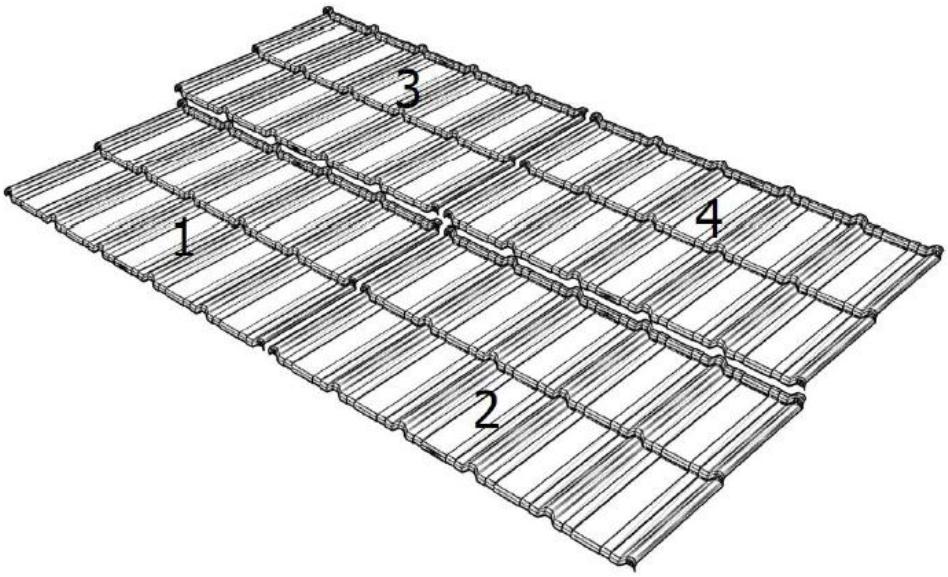

END OF REPORT

This evaluation report is provided for State of Florida product approval under Rule 61G20-3. The manufacturer shall notify CREEK Technical Services, LLC of any product changes or quality assurance changes throughout the duration for which this report is valid. This evaluation report does not express nor imply warranty, installation, recommended use, or other product attributes that are not specifically addressed herein.